PARTS CATALOG

2-STROKE ENGINE

TH023V

PRODUCT CODE	NOTE
TH023V-AS50	STD

Kawasaki
KAWASAKI HEAVY INDUSTRIES, LTD

ama garden

P/N 99907-2737-01

E0110-A391A

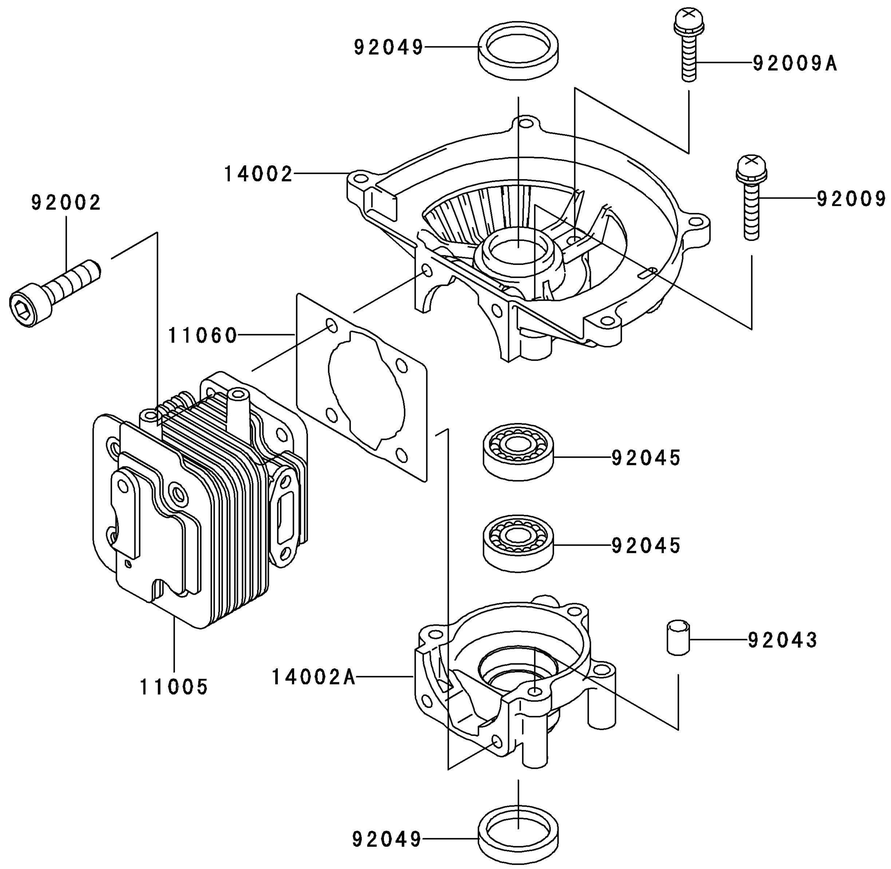

Ref. No.	Part No.	Description	Quantity A
11005	11005-2150	CYLINDER-ENGINE	1
11060	11060-2402	GASKET,CYLINDER	1
14002	14002-2349	CRANKCASE	1
14002A	14002-2350	CRANKCASE	1
92002	92002-2163	BOLT	4
92009	92009-2115	SCREW	2
92009A	92009-2235	SCREW,5X25	1
92043	92043-1302	PIN	2
92045	92045-2060	BEARING-BALL,6001V3	2
92049	92049-2108	SEAL-OIL	2

E0120-A204A

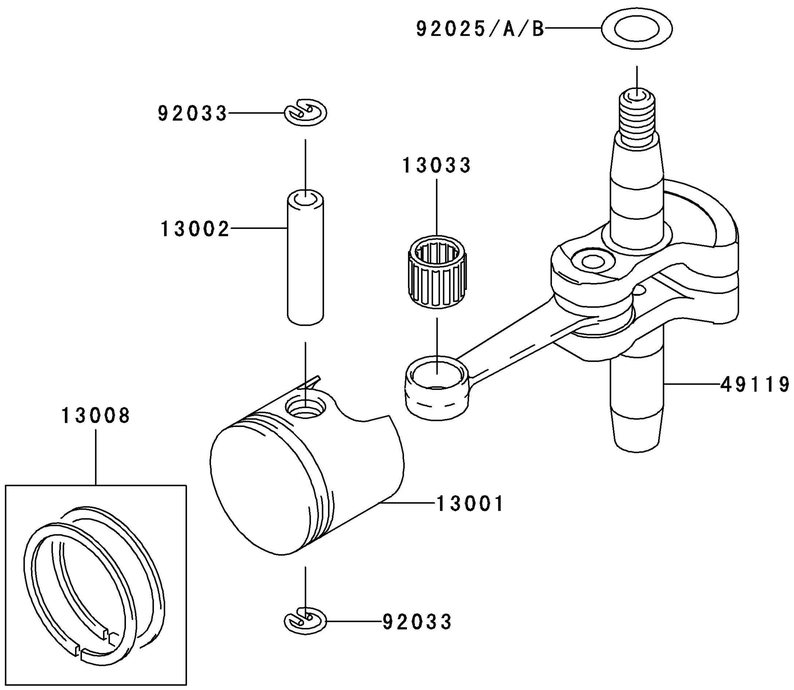

Ref. No.	Part No.	Description	Quantity A
13001	13001-2154	PISTON-ENGINE	1
13002	13002-2058	PIN-PISTON	1
13008	13008-6050	RING-SET-PISTON	1
13033	13033-2055	BEARING-SMALL END	1
49119	49119-2205	CRANKSHAFT-ASSY	1
92025	92025-2104	SHIM,T=0.20	AR
92025A	92025-2105	SHIM,T=0.40	AR
92025B	92025-2106	SHIM,T=0.60	AR
92033	92033-2191	RING-SNAP	2

E0150-A459C

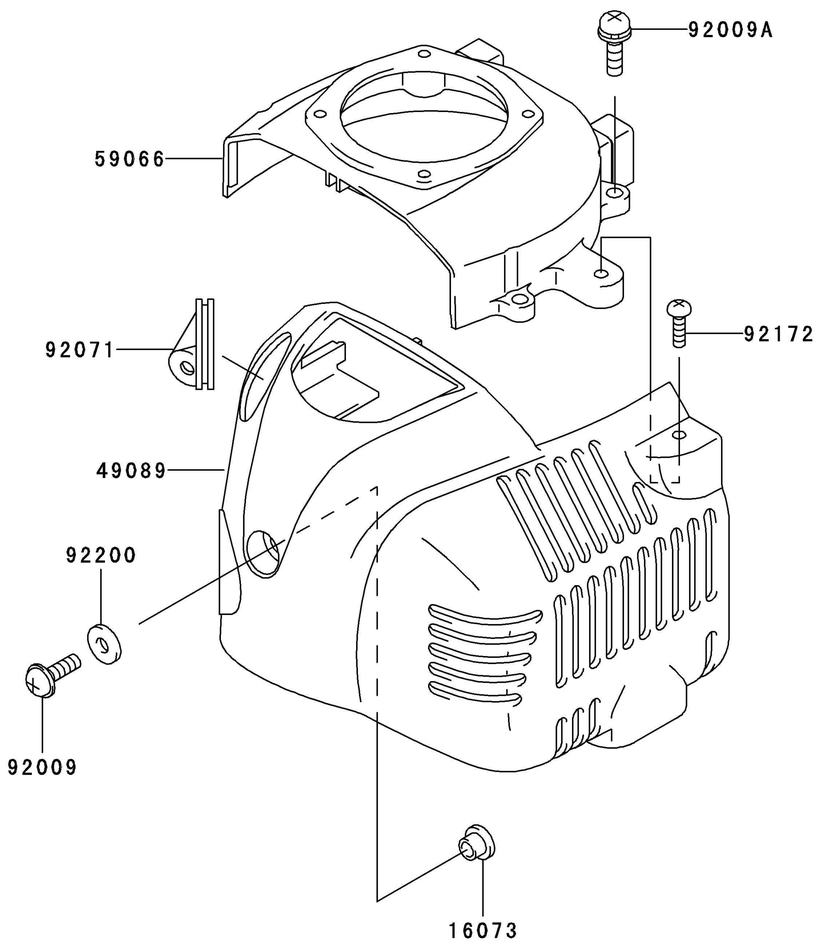

Ref. No.	Part No.	Description	Quantity A
16073	16073-2197	INSULATOR	1
49089	49089-2585	SHROUD-ENGINE	1
59066	59066-2781	HOUSING-FAN	1
92009	92009-2394	SCREW,5X16	1
92009A	92009-2395	SCREW,5X16	4
92071	92071-2160	GROMMET	1
92172	92172-2061	SCREW,4X14	1
92200	92200-2156	WASHER	1

E0160-A897A

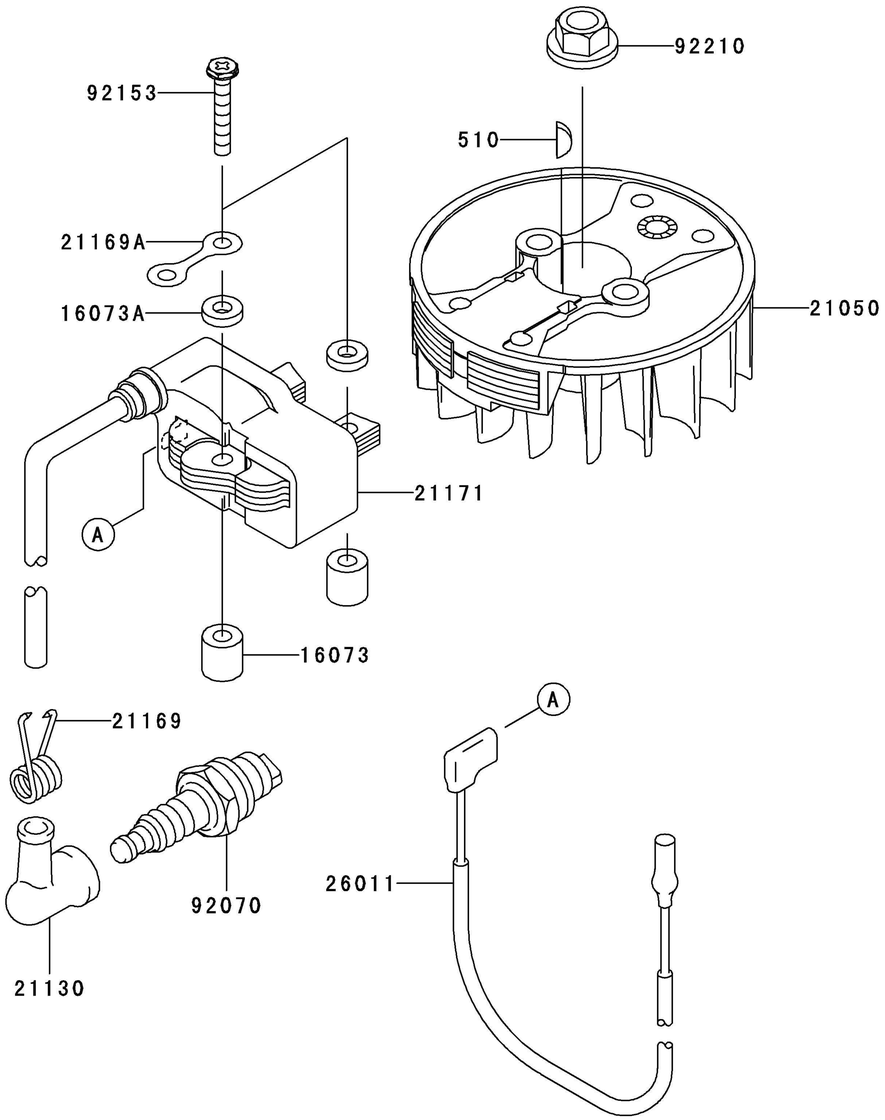

Ref. No.	Part No.	Description	Quantity A
16073	16073-2214	INSULATOR	2
16073A	16073-2215	INSULATOR	2
21050	21050-2296	FLYWHEEL	1
21130	21130-2056	CAP-SPARK PLUG	1
21169	21169-2051	TERMINAL	1
21169A	21169-2072	TERMINAL	1
21171	21171-2241	COIL-ASSY-IGNITION	1
26011	26011-2370	WIRE-LEAD,L=180	1
92070	92070-2108	PLUG-SPARK,BPMR6A(NGK),SOLID	1
92153	92153-2069	BOLT,04X25	2
92210	92210-2094	NUT	1
510	510A3100	KEY-WOODRUFF	1

E0180-A627A

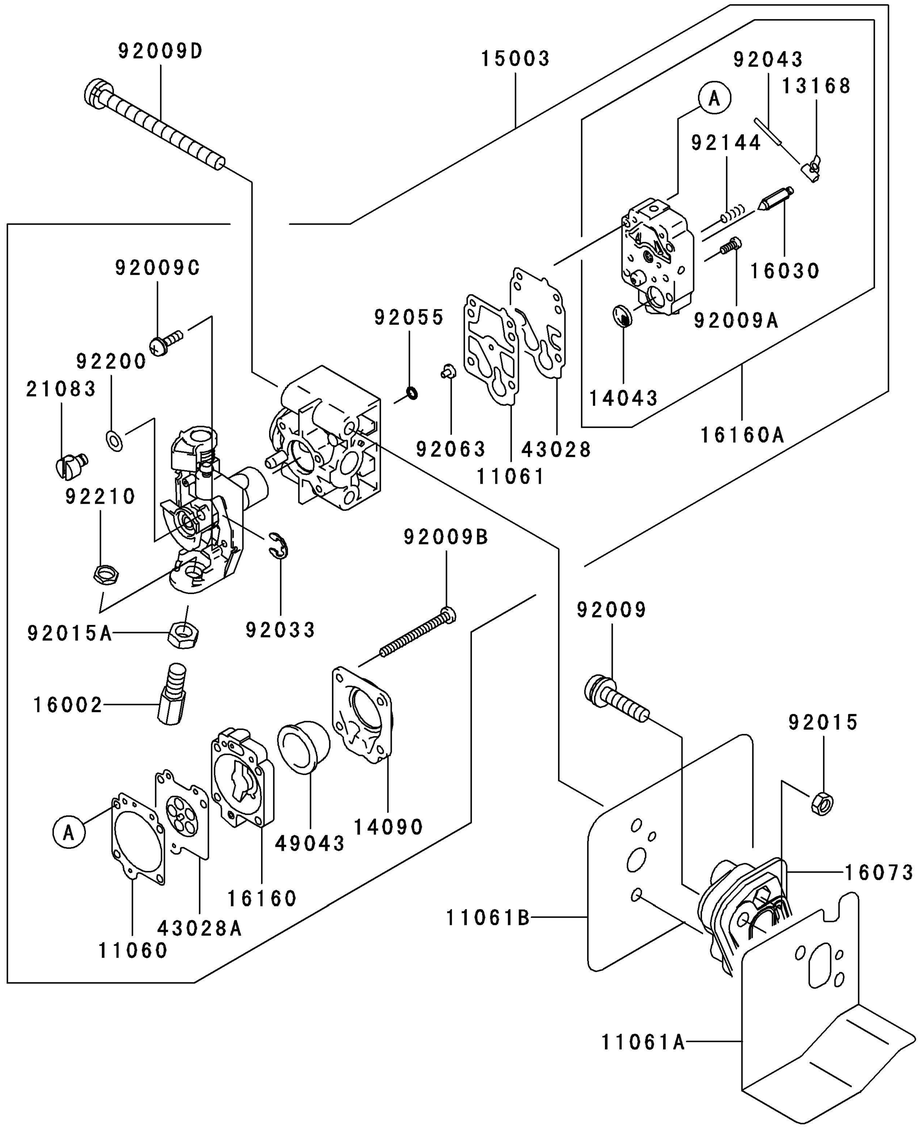

Ref. No.	Part No.	Description	Quantity A
11060	11060-2111	GASKET	1
11061	11061-2054	GASKET	1
11061A	11061-2098	GASKET	1
11061B	11061-2099	GASKET	1
13168	16055-2051	LEVER	1
14043	14043-2051	FILTER	1
14090	14090-2017	COVER,PRIMER PUMP	1
15003	15003-2807	CARBURETOR-ASSY	1
16002	16002-2058	ADJUSTER-CABLE	1
16030	16030-2078	VALVE-FLOAT	1
16073	16073-2231	INSULATOR	1
16160	16160-2089	BODY	1
16160A	16160-2103	BODY	1
21083	21083-2073	ARM	1
43028	43028-2067	DIAPHRAGM	1
43028A	43028-2090	DIAPHRAGM	1
49043	49043-2067	PUMP-PRIMING	1
92009	92009-2249	SCREW,5X20	2
92009A	92009-2336	SCREW	1
92009B	92009-2337	SCREW	4
92009C	92009-2373	SCREW	2
92009D	92009-2398	SCREW,5X60	2
92015	92015-2097	NUT,M5	2
92015A	92015-2145	NUT	1
92033	92033-2078	RING-SNAP	1
92043	92043-2094	PIN	1
92055	92055-2147	RING-O	1
92063	92063-2425	JET-MAIN,#32.5	1
92144	92144-2308	SPRING	1
92200	92200-2074	WASHER	1
92210	92210-2089	NUT	1

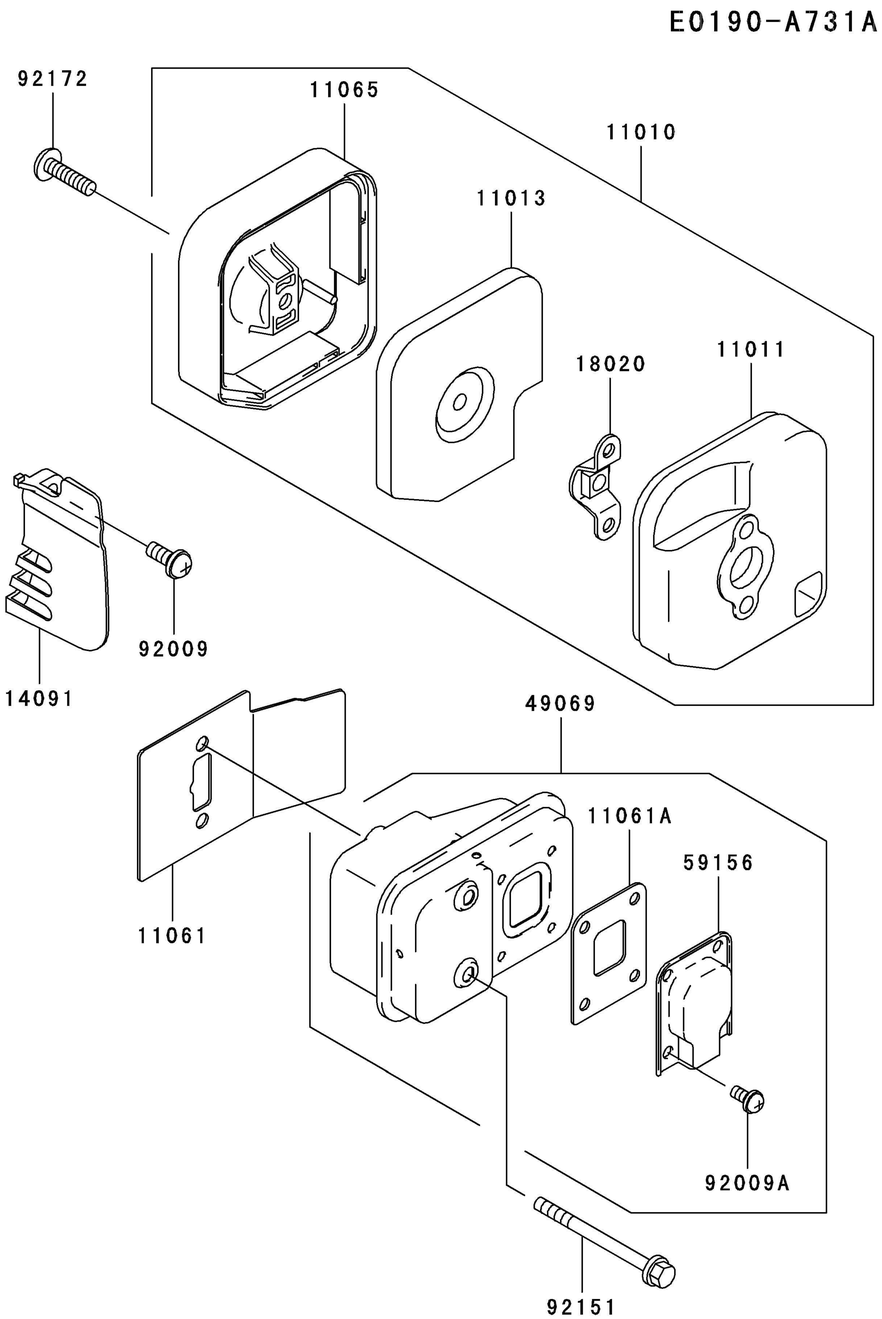

Ref. No.	Part No.	Description	Quantity A
11010	11010-2572	FILTER-ASSY-AIR	1
11011	11011-2332	CASE-AIR FILTER	1
11013	11013-2208	ELEMENT-AIR FILTER	1
11061	11061-2082	GASKET,MUFFLER	1
11061A	11061-2083	GASKET	1
11065	11065-2114	CAP	1
14091	14091-2088	COVER	1
18020	18020-2082	BAFFLE	1
49069	49069-2369	MUFFLER-ASSY	1
59156	59156-2285	PIPE-TAIL	1
92009	92009-2393	SCREW,5X12	1
92009A	92009-2446	SCREW	4
92151	92151-2074	BOLT,5X55	2
92172	92172-2081	SCREW,5X20	1

E0200-A377B

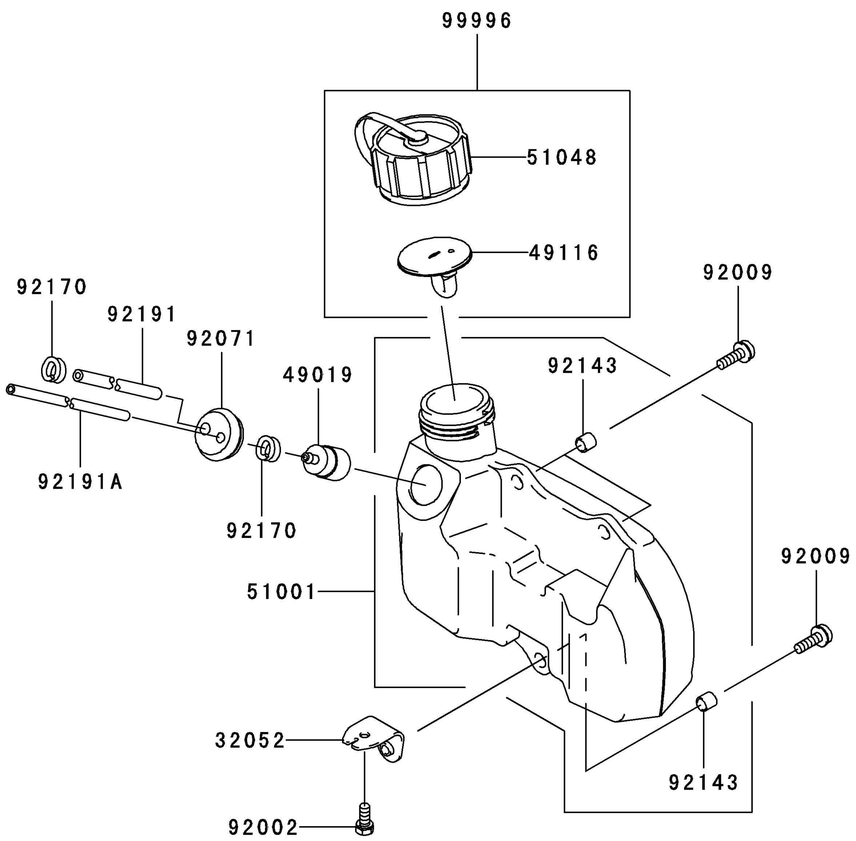

Ref. No.	Part No.	Description	Quantity A
32052	32052-2228	BRACKET-TANK	1
49019	49019-2111	FILTER-FUEL	1
49116	49116-2064	VALVE-ASSY	1
51001	51001-2310	TANK-COMP-FUEL	1
51048	51048-2078	CAP-ASSY-TANK	1
92002	92002-2313	BOLT	1
92009	92009-2368	SCREW,5X16	3
92071	92071-2142	GROMMET,FUEL TANK	1
92143	92143-2161	COLLAR,TANK	3
92170	92170-2080	CLAMP,FUEL FILTER	2
92191	92191-2154	TUBE	1
92191A	92191-2155	TUBE	1
99996	99996-6060	KIT,CAP-ASSY-TANK	1

E0210-A259D

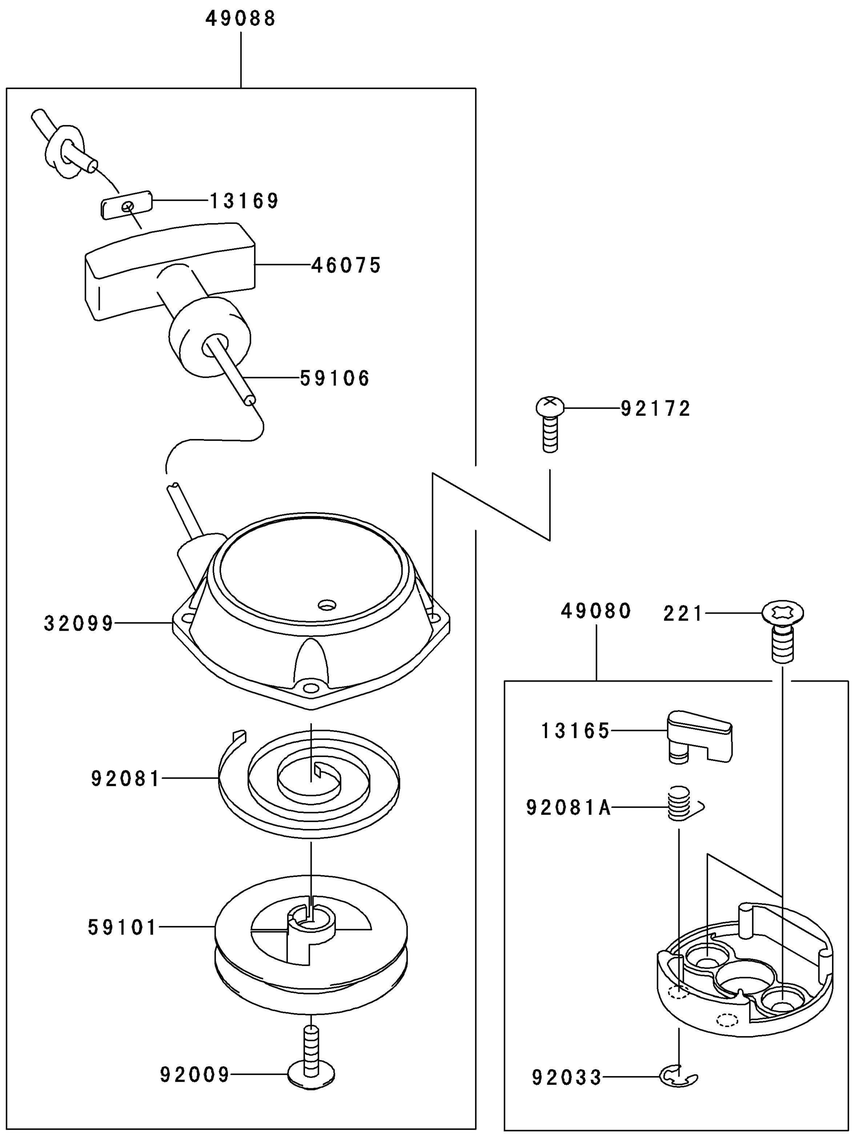

Ref. No.	Part No.	Description	Quantity A
13165	13165-2052	PAWL	1
13169	13169-2386	PLATE,RECOIL STARTER	1
32099	32099-2406	CASE,STARTER-RECOIL	1
46075	46075-2116	GRIP,RECOIL STARTER	1
49080	49080-2099	PULLEY-STARTING	1
49088	49088-2515	STARTER-RECOIL	1
59101	59101-2106	REEL,RECOIL STARTER	1
59106	59106-2147	ROPE,3.5X800	1
92009	92009-2358	SCREW	1
92033	92033-2010	RING-SNAP	1
92081	92081-2238	SPRING,RECOIL	1
92081A	92081-2253	SPRING	1
92172	92172-2061	SCREW,4X14	4
221	221B0616	SCREW-CSK-CROS	2