E0110-A060A

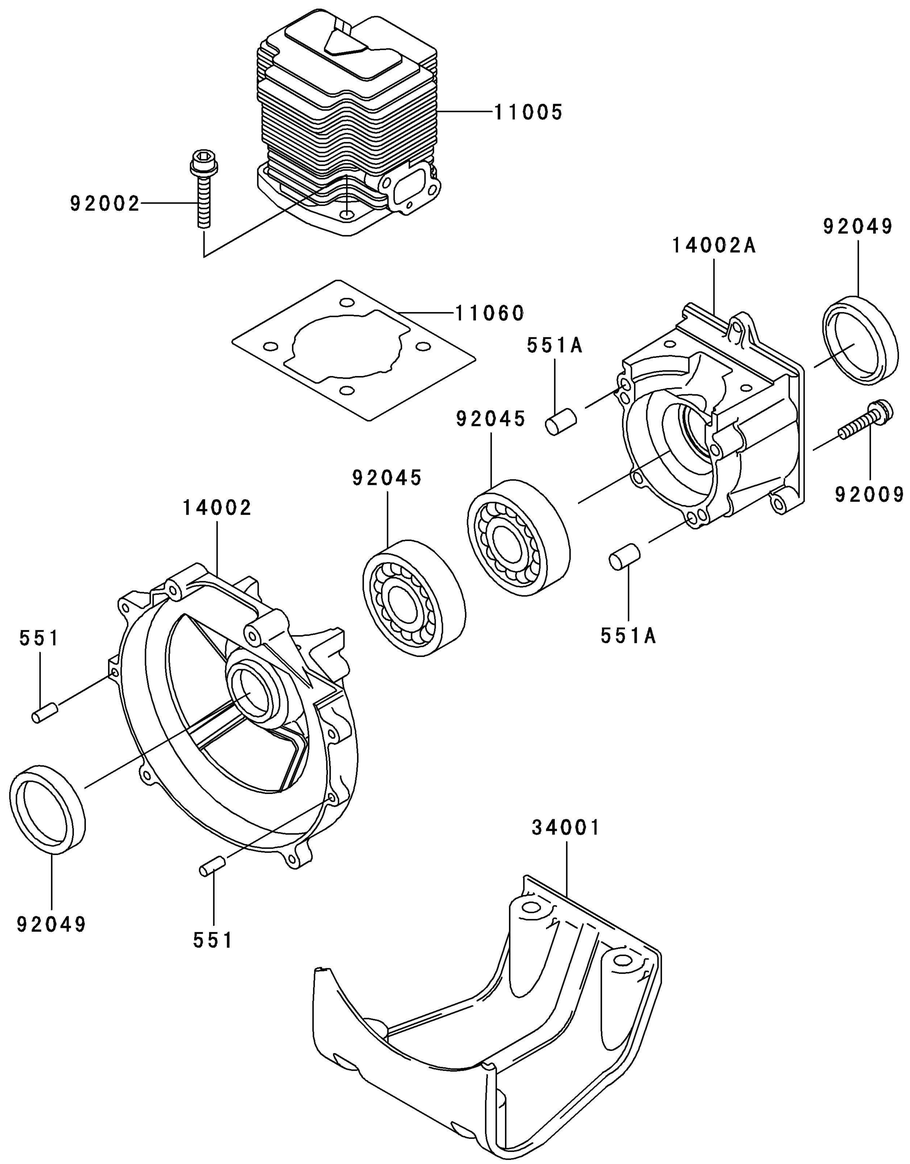

Ref. No.	Part No.	Description	Quantity A	Quantity B
11005	11005-2123	CYLINDER-ENGINE	1	1
11060	11060-2296	GASKET,CYLINDER	1	1
14002	14002-2316	CRANKCASE	1	1
14002A	14002-2317	CRANKCASE	1	1
34001	34001-2082	STAND	1	1
92002	92002-2150	BOLT	4	4
92009	92009-2115	SCREW	4	4
92045	92045-2005	BEARING-BALL,6202C3	2	2
92049	92049-2206	SEAL-OIL	2	2
551	551A0410	PIN-DOWEL	2	2
551A	551A0610	PIN-DOWEL	2	2

E0120-A054E

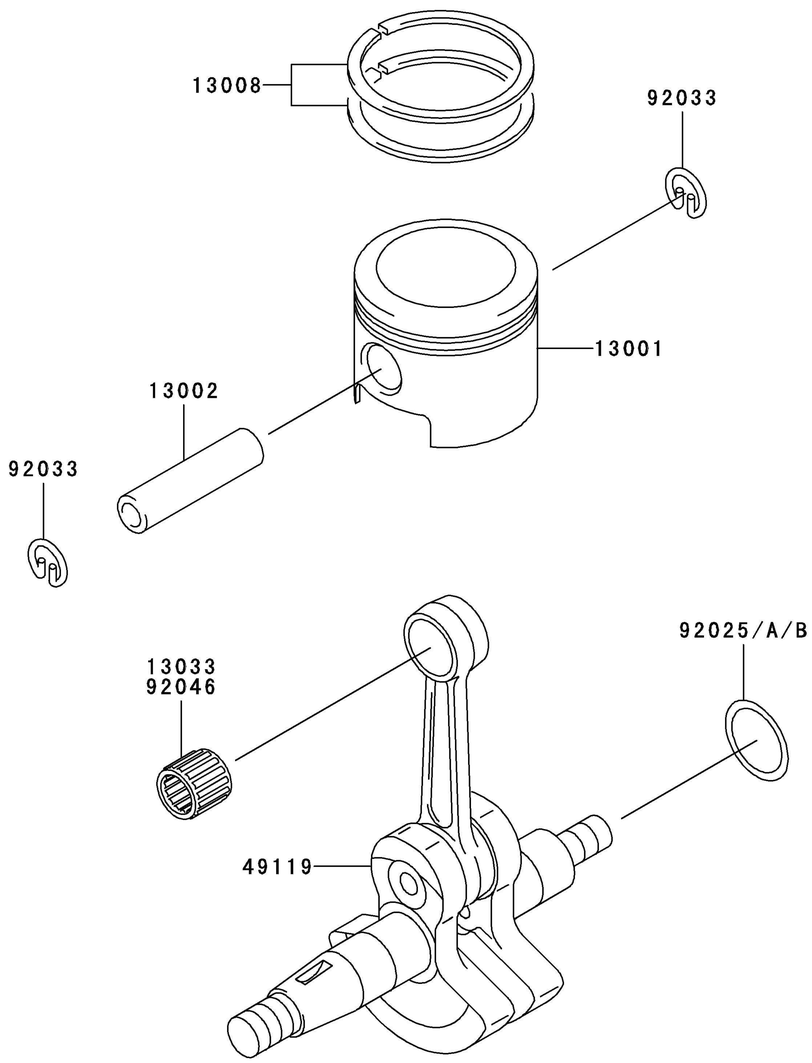

Ref. No.	Part No.	Description	Quantity A	Quantity B
13001	13001-2141	PISTON-ENGINE	1	1
13002	13002-2067	PIN-PISTON	1	1
13008	13008-6044	RING-SET-PISTON	1	1
13033	13033-2061	BEARING-SMALL END		1
49119	49119-2173	CRANKSHAFT-ASSY	1	1
92025	92025-2135	SHIM,T=0.20	AR	AR
92025A	92025-2136	SHIM,T=0.40	AR	AR
92025B	92025-2137	SHIM,T=0.60	AR	AR
92033	92033-2058	RING-SNAP	2	2
92046	13033-2005	BEARING-NEEDLE	1	

E0150-A334Q

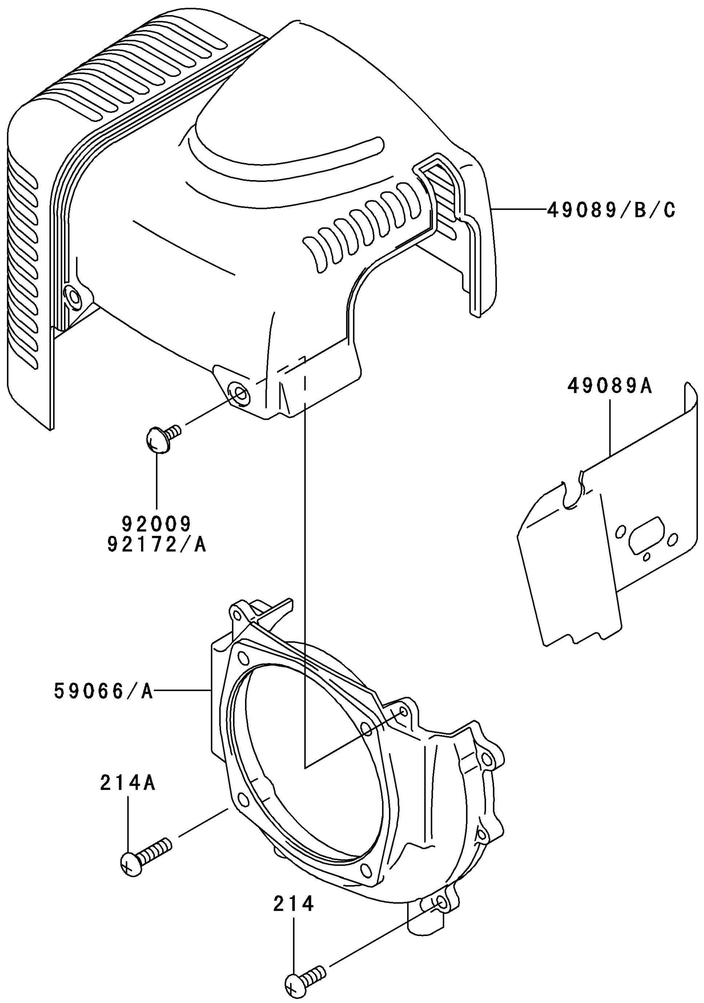

Ref. No.	Part No.	Description	Quantity A	Quantity B
49089	49089-2385	SHROUD-ENGINE	*	
	(	- TH048-123604)		
49089A	49089-2386	SHROUD-ENGINE	1	1
49089B	49089-2553	SHROUD-ENGINE		1
49089C	49089-2553	SHROUD-ENGINE	1	
	(	TH048-123605 -)		
59066	59066-2747	HOUSING-FAN	1	
59066A	59066-2794	HOUSING-FAN		1
92009	92009-2234	SCREW,4X10	*	
92172	92172-2060	SCREW,4X10		2
92172A	92172-2060	SCREW,4X10	2	
214	214B0514	SCREW-PAN+-	3	3
214A	214B0520	SCREW-PAN+-	1	1

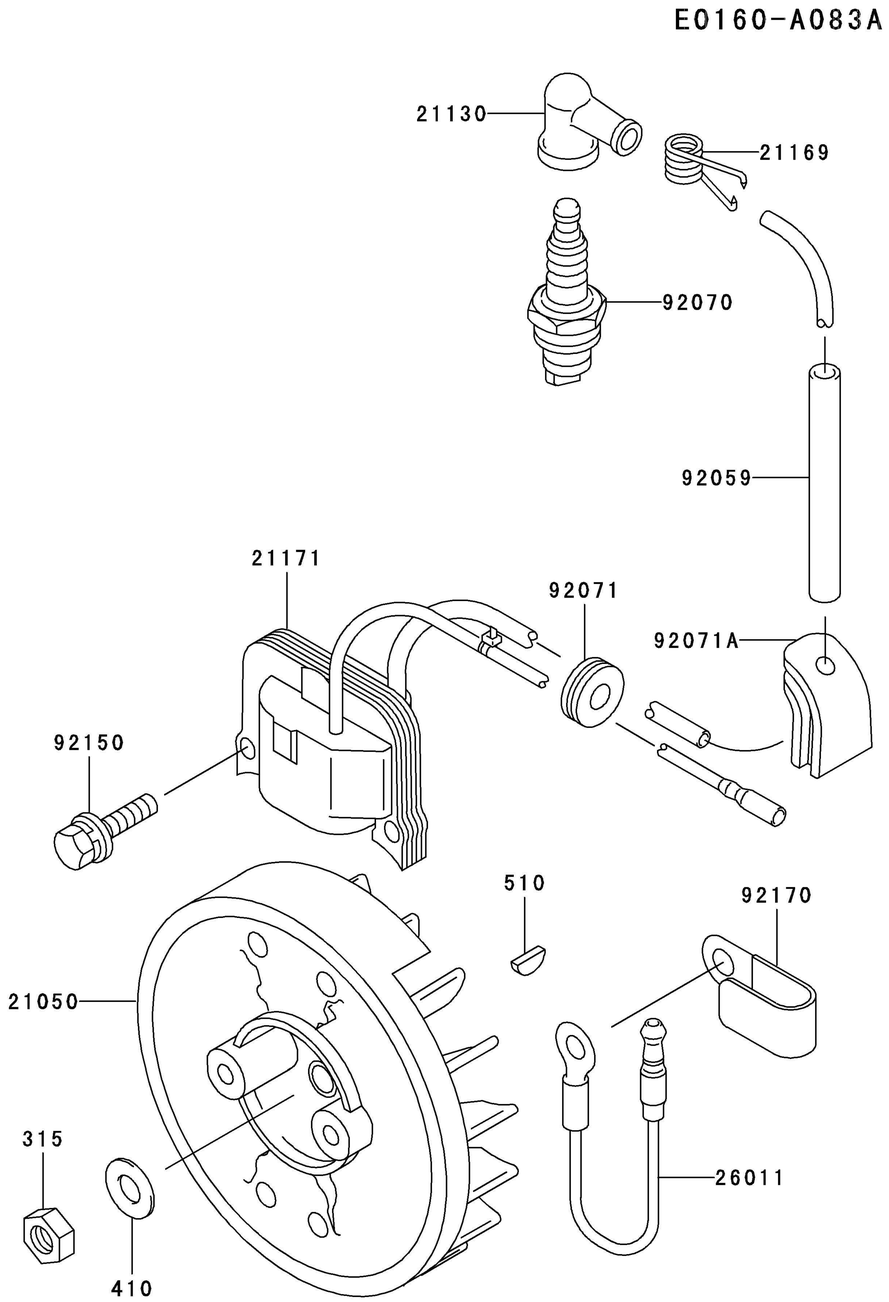

Ref. No.	Part No.	Description	Quantity A	Quantity B
21050	21050-2240	FLYWHEEL	1	1
21130	21130-2056	CAP-SPARK PLUG	1	1
21169	21169-2051	TERMINAL	1	1
21171	21171-2195	COIL-ASSY-IGNITION	1	1
26011	26011-2113	WIRE-LEAD	1	1
92059	92059-2103	TUBE,6X7.4X108	1	1
92070	92070-2060	PLUG-SPARK,BMR6A(NGK),SOLID	1	1
92071	92071-2097	GROMMET	1	1
92071A	92071-2143	GROMMET,IGNITION COIL	1	1
92150	92150-2182	BOLT,5X18	2	2
92170	92170-2041	CLAMP	1	1
315	315B1000	NUT-HEX-FINE	1	1
410	410B1000	W-PLAIN-S	1	1
510	510A3100	KEY-WOODRUFF	1	1

E0170-A239A

Ref. No.	Part No.	Description	Quantity A	Quantity B
32099	32099-2326	CASE	1	1
54012	54012-2362	CABLE-THROTTLE	1	1

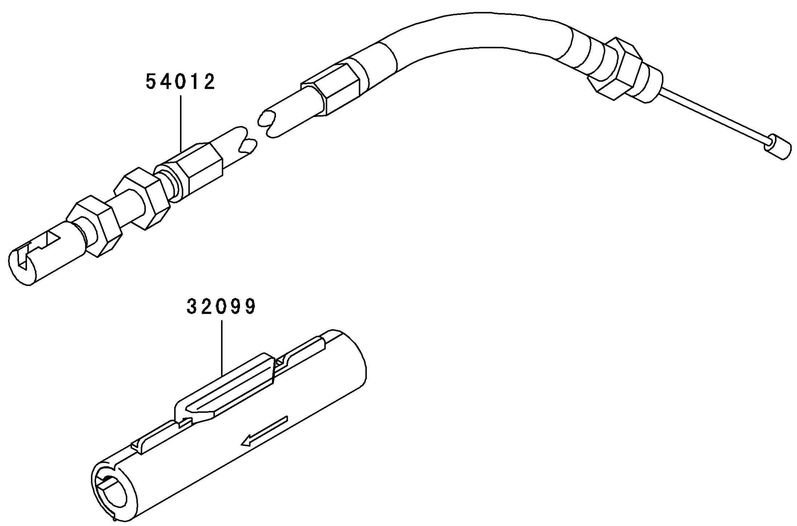

E0180-A105B

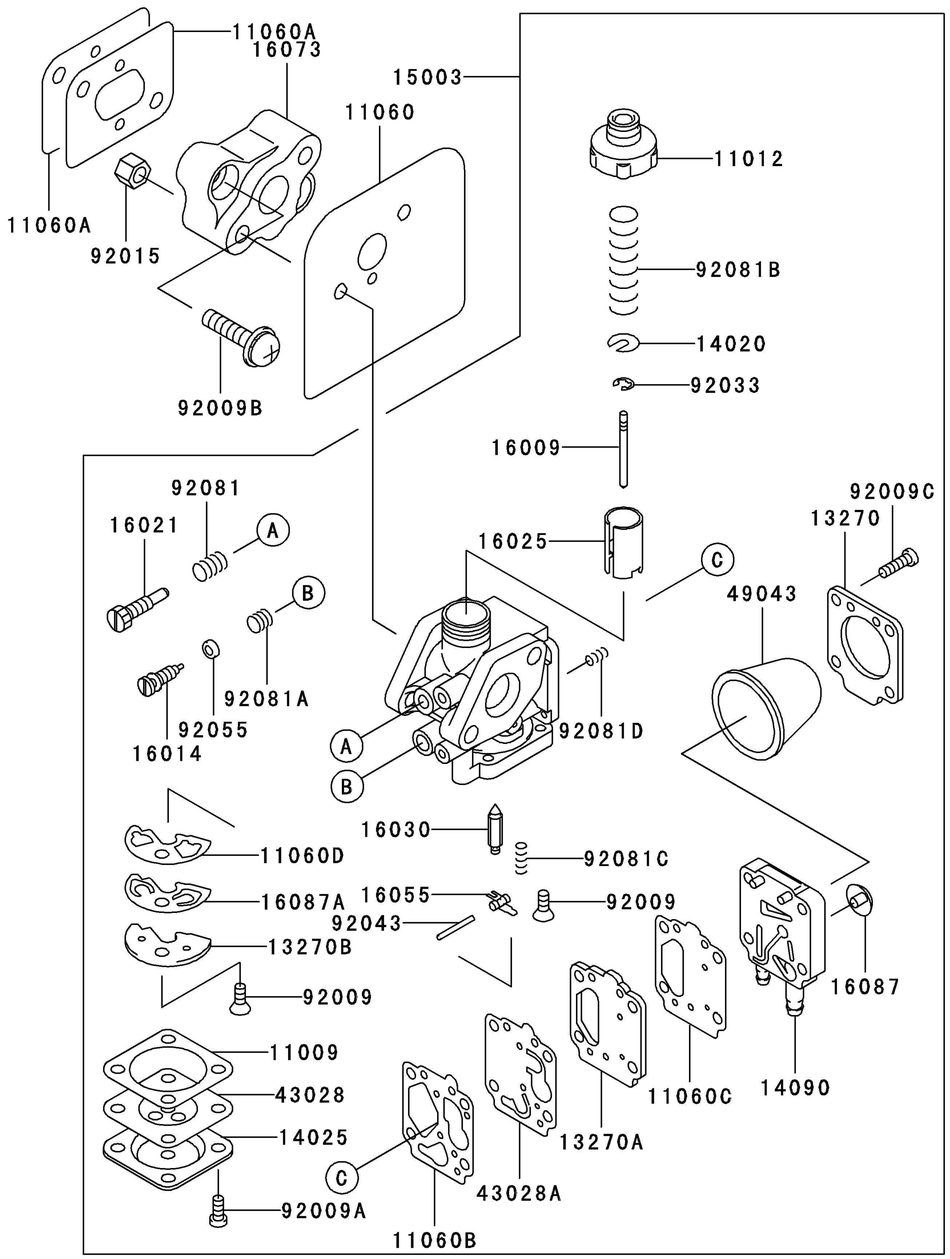

Ref. No.	Part No.	Description	Quantity A	Quantity B
11009	11009-2366	GASKET	1	
11012	11012-2185	CAP,BODY	1	
11060	11060-2298	GASKET,CARBURETOR	1	
11060A	11060-2299	GASKET,INSULATOR	2	
11060B	11060-2305	GASKET	1	
11060C	11060-2306	GASKET	1	
11060D	11060-2307	GASKET	1	
13270	13270-2014	PLATE	1	
13270A	13270-2015	PLATE	1	
13270B	13270-2016	PLATE	1	
14020	14020-2009	RETAINER,VALVE	1	
14025	14025-2027	COVER	1	
14090	14090-2060	COVER	1	
15003	15003-2547	CARBURETOR-ASSY	1	
16009	16009-2114	NEEDLE-JET,#114	1	
16014	16014-2064	SCREW-PILOT AIR	1	
16021	16021-2008	SCREW-THROTTLE STOP	1	
16025	16025-2173	VALVE-THROTTLE	1	
16030	16030-2087	VALVE-FLOAT	1	
16055	13168-2118	ARM-FLOAT	1	
16073	16073-2176	INSULATOR	1	
16087	16087-2059	VALVE-CHECK	1	
16087A	16087-2060	VALVE-CHECK	1	
43028	43028-2065	DIAPHRAGM	1	
43028A	43028-2082	DIAPHRAGM	1	
49043	49043-2071	PUMP-PRIMING	1	
92009	92009-2053	SCREW	2	
92009A	92009-2061	SCREW	4	
92009B	92009-2249	SCREW,5X20	2	
92009C	92009-2361	SCREW,3X14	4	
92015	92015-2097	NUT,M5	2	
92033	92033-2070	RING-SNAP	1	
92043	92043-2099	PIN	1	
92055	92055-2067	RING-O	1	
92081	92081-2245	SPRING	1	
92081A	92081-2249	SPRING	1	
92081B	92081-2272	SPRING	1	
92081C	92081-2339	SPRING	1	
92081D	92081-2340	SPRING	1	

E0180-A604B

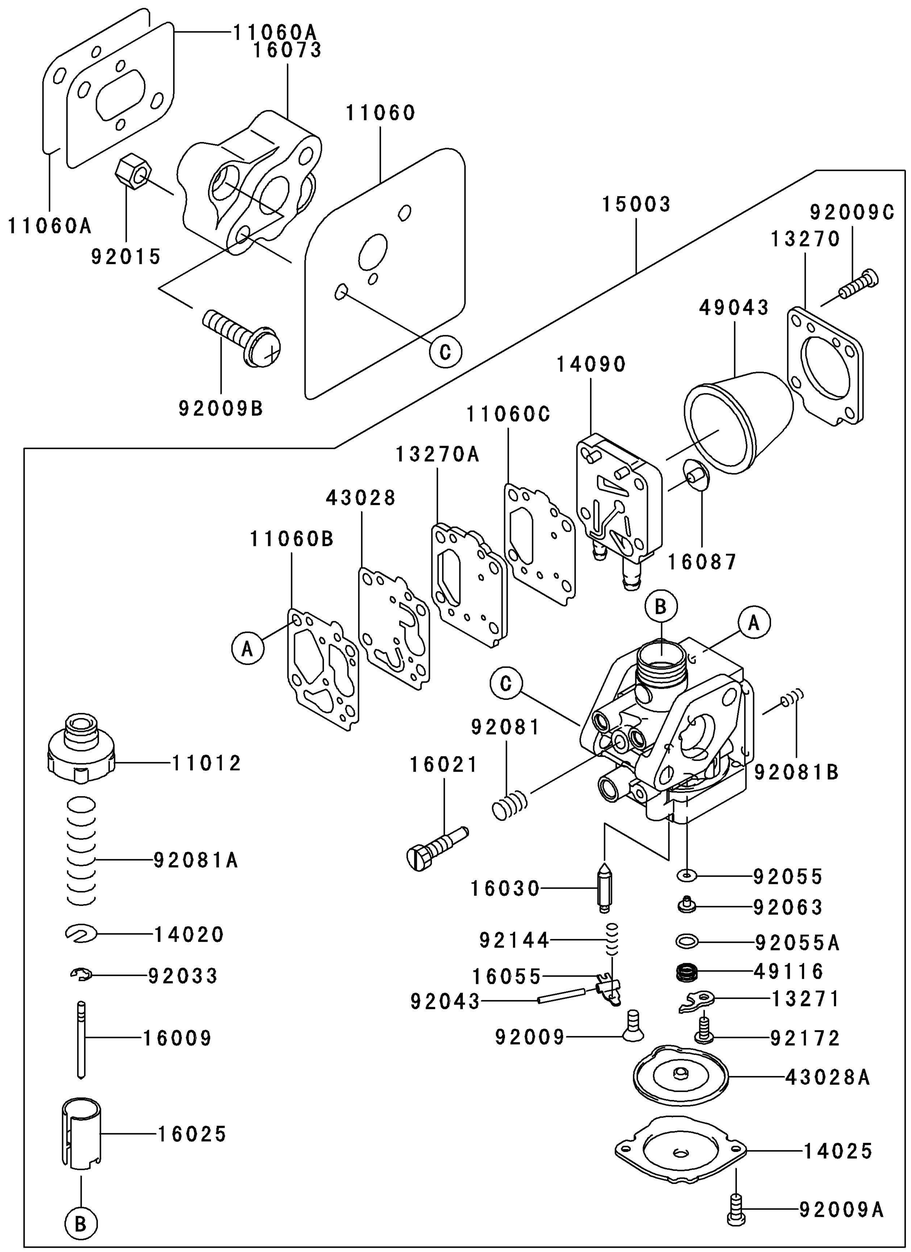

Ref. No.	Part No.	Description	Quantity A	Quantity B
11012	11012-2185	CAP,BODY		1
11060	11060-2298	GASKET,CARBURETOR		1
11060A	11060-2299	GASKET,INSULATOR		2
11060B	11060-2305	GASKET		1
11060C	11060-2306	GASKET		1
13270	13270-2014	PLATE		1
13270A	13270-2015	PLATE		1
13271	13271-2247	PLATE		1
14020	14020-2009	RETAINER,VALVE		1
14025	14025-2027	COVER		1
14090	14090-2060	COVER		1
15003	15003-2938	CARBURETOR-ASSY		1
16009	16009-2114	NEEDLE-JET,#114		1
16021	16021-2008	SCREW-THROTTLE STOP		1
16025	16025-2173	VALVE-THROTTLE		1
16030	16030-2087	VALVE-FLOAT		1
16055	13168-2118	ARM-FLOAT		1
16073	16073-2176	INSULATOR		1
16087	16087-2059	VALVE-CHECK		1
43028	43028-2082	DIAPHRAGM		1
43028A	43028-2093	DIAPHRAGM		1
49043	49043-2071	PUMP-PRIMING		1
49116	49116-2066	VALVE-ASSY		1
92009	92009-2053	SCREW		1
92009A	92009-2061	SCREW		2
92009B	92009-2249	SCREW,5X20		2
92009C	92009-2361	SCREW,3X14		4
92015	92015-2097	NUT,M5		2
92033	92033-2070	RING-SNAP		1
92043	92043-2099	PIN		1
92055	92055-2077	RING-O		1
92055A	92055-2207	RING-O		1
92063	92063-2454	JET-MAIN,#55		1
92081	92081-2245	SPRING		1
92081A	92081-2272	SPRING		1
92081B	92081-2340	SPRING		1
92144	92144-2009	SPRING		1
92172	92172-2086	SCREW		1

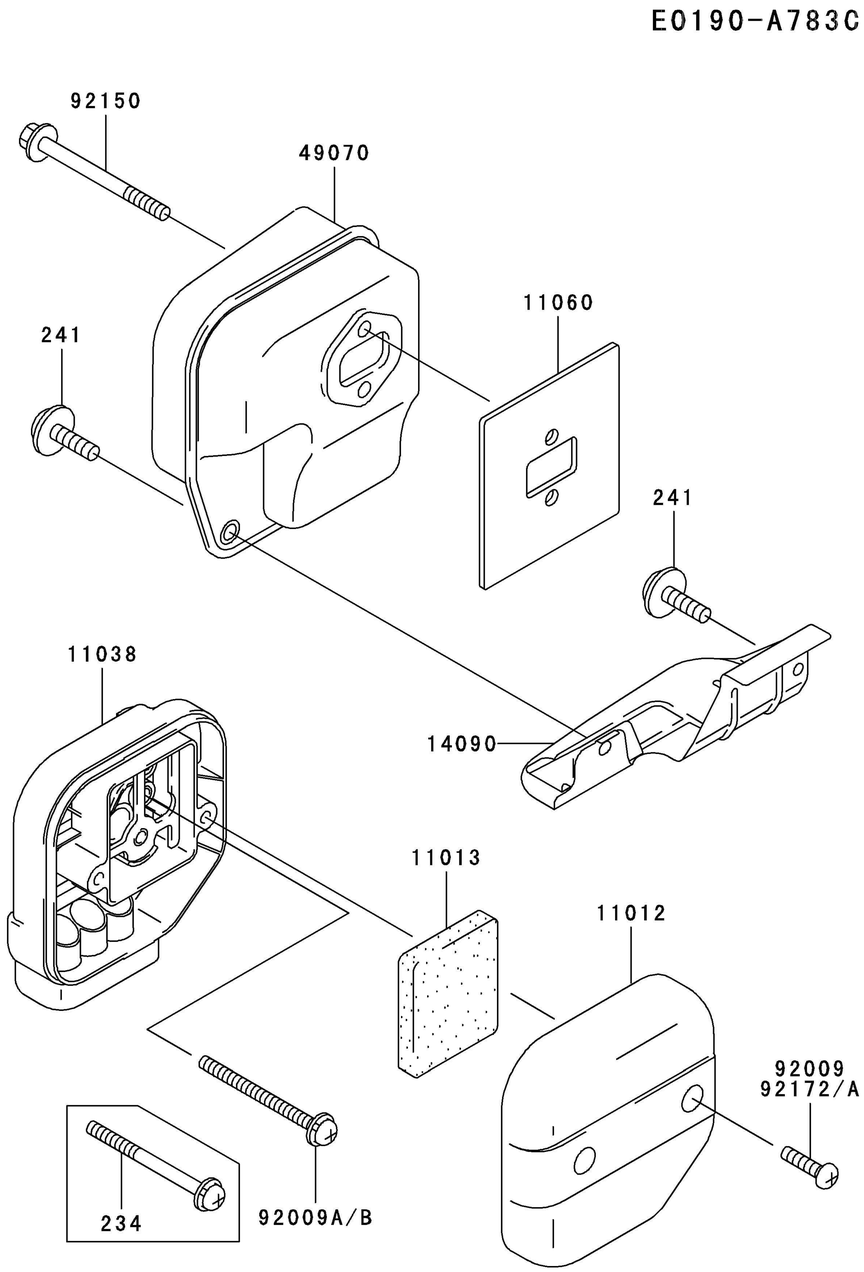

Ref. No.	Part No.	Description	Quantity A	Quantity B
11012	11012-2349	CAP,AIR FILTER	1	1
11013	11013-2081	ELEMENT-AIR FILTER	1	1
11038	11038-2055	CASE-ASSY-AIR FILTER	1	1
11060	11060-2297	GASKET,MUFFLER	1	1
14090	14090-2059	COVER,MUFFLER	1	1
49070	49070-2630	MUFFLER-COMP	1	1
92009	92009-2324	SCREW	*	
92009A	92009-2449	SCREW,5X55		2
92009B	92009-2449	SCREW,5X55	2	
92150	92150-2180	BOLT,6X65	2	2
92172	92172-2062	SCREW		2
92172A	92172-2062	SCREW	2	
234	234B0555	SCREW-PAN-WSP+-	*	
241	241B0512	SCREW-PAN-WP+-	2	2

E0200-A146F

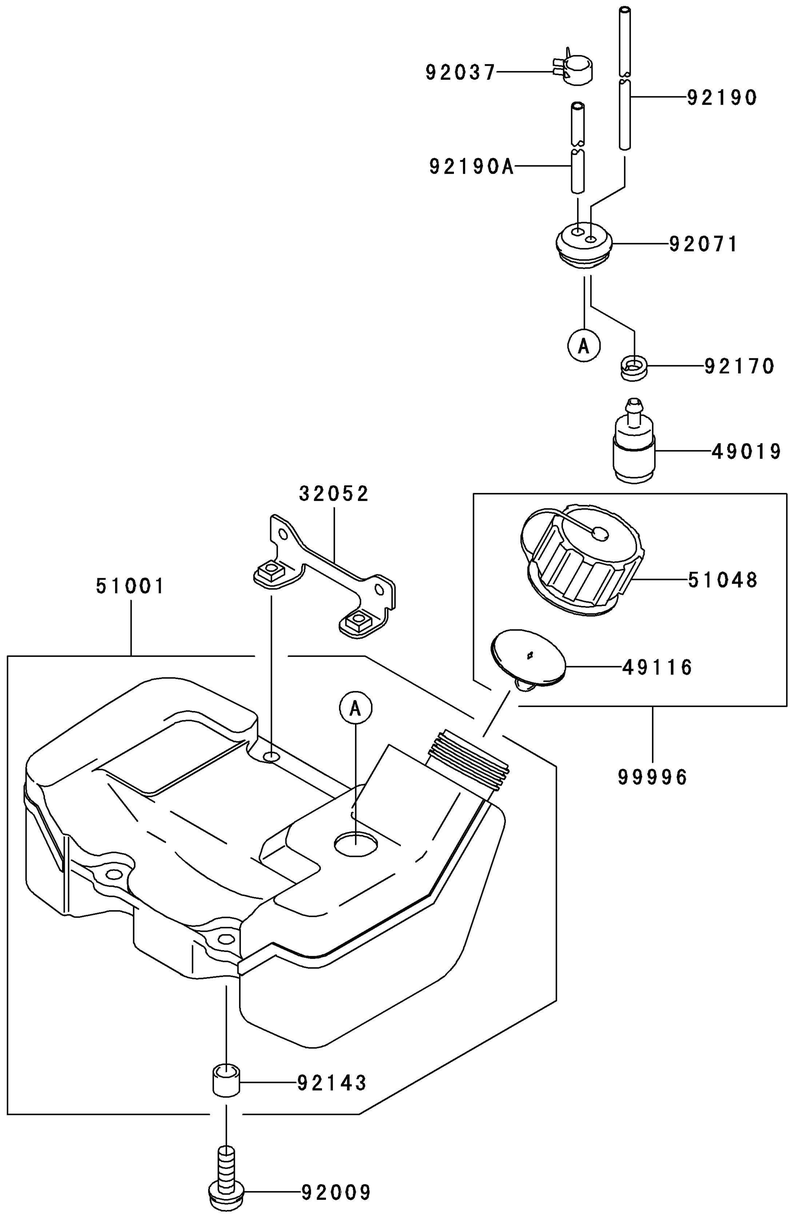

Ref. No.	Part No.	Description	Quantity A	Quantity B
32052	32052-2215	BRACKET-TANK	1	1
49019	49019-2111	FILTER-FUEL	1	1
49116	49116-2064	VALVE-ASSY	1	1
51001	51001-2268	TANK-COMP-FUEL	1	1
51048	51048-2078	CAP-ASSY-TANK	1	1
92009	92009-2383	SCREW,5X20	4	4
92037	92037-2139	CLAMP	1	1
92071	92071-2142	GROMMET,FUEL TANK	1	1
92143	92143-2162	COLLAR	4	4
92170	92170-2080	CLAMP,FUEL FILTER	1	1
92190	92190-2157	TUBE,3X5X200	1	1
92190A	92190-2161	TUBE,3X6X100	1	1
99996	99996-6060	KIT,CAP-ASSY-TANK	1	1

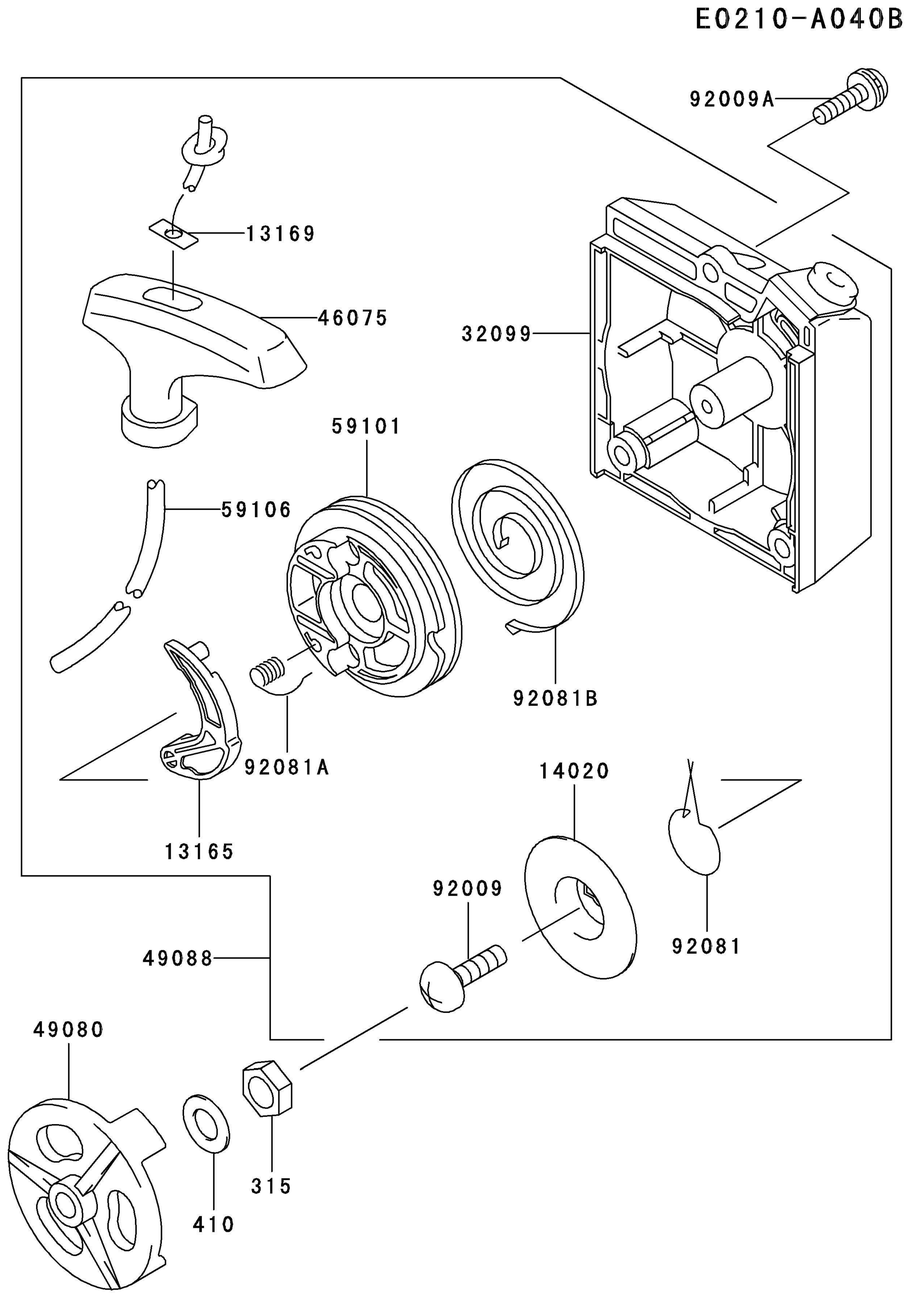

Ref. No.	Part No.	Description	Quantity A	Quantity B
13165	13165-2058	PAWL,RECOIL STARTER	1	1
13169	13169-2386	PLATE,RECOIL STARTER	1	1
14020	14020-2057	RETAINER,RECOIL STARTER	1	1
32099	32099-2272	CASE,RECOIL STARTER	1	1
46075	46075-2067	GRIP,RECOIL STARTER	1	1
49080	49080-2173	PULLEY-STARTING	1	1
49088	49088-2442	STARTER-RECOIL	1	1
59101	59101-2067	REEL,RECOIL STARTER	1	1
59106	59106-2077	ROPE,3.8X1200	1	1
92009	92009-2218	SCREW,5X12	1	1
92009A	92009-2249	SCREW,5X20	3	3
92081	92081-2274	SPRING	1	1
92081A	92081-2275	SPRING	1	1
92081B	92081-2318	SPRING	1	1
315	315B0800	NUT-HEX-FINE	1	1
410	410B0800	W-PLAIN-S	1	1

E0220-A022A

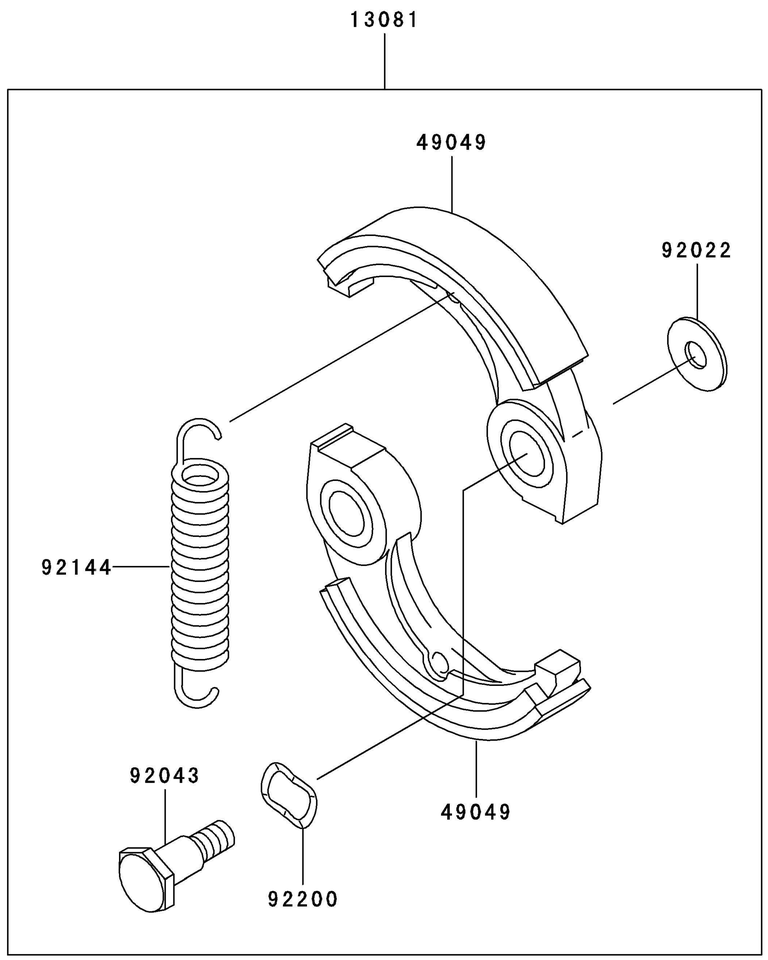

Ref. No.	Part No.	Description	Quantity A	Quantity B
13081	13081-2221	CLUTCH-ASSY	1	1
49049	49049-2075	SHOE-CLUTCH	2	2
92022	92026-2125	WASHER	2	2
92043	92043-2210	PIN,CLUTCH	2	2
92144	92144-2390	SPRING	1	1
92200	92200-2064	WASHER,SPRING,10.5X14.5X0.3	2	2

F0290-A841A

Ref. No.	Part No.	Description	Quantity A	Quantity B
56039	56039-2701	LABEL-PRODUCT	1	1
56070	56070-2020	LABEL-WARNING	1	1
56080	56080-2106	LABEL-BRAND	1	1

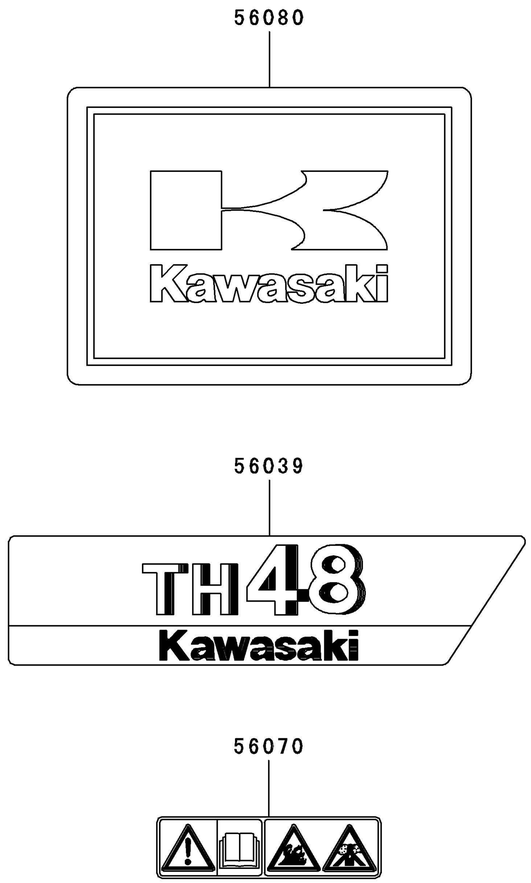

PART NAME INDEX

AIR-FILTER/MUFFLER B-10
CARBURETOR B-08
CARBURETOR B-09
CONTROL-EQUIPMENT B-07
COOLING-EQUIPMENT B-05
CYLINDER/CRANKCASE B-03
ELECTRIC-EQUIPMENT B-06
FUEL-TANK/FUEL-VALVE B-11
LABEL D-03
P.T.O-EQUIPMENT C-04
PISTON/CRANKSHAFT B-04
STARTER C-03

This catalog covers:

TH048D- □ S50

GRID NO. **H-10**

This grid covers:

NUMERICAL PARTS INDEX

Part No.	Grid No.
11005-2123	B-03
11009-2366	B-08
11012-2185	B-08
11012-2185	B-09
11012-2349	B-10
11013-2081	B-10
11038-2055	B-10
11060-2296	B-03
11060-2297	B-10
11060-2298	B-08
11060-2298	B-09
11060-2299	B-08
11060-2299	B-09
11060-2305	B-08
11060-2305	B-09
11060-2306	B-08
11060-2306	B-09
11060-2307	B-08
13001-2141	B-04
13002-2067	B-04
13008-6044	B-04
13033-2005	B-04
13033-2061	B-04
13081-2221	C-04
13165-2058	C-03
13168-2118	B-08
13168-2118	B-09
13169-2386	C-03
13270-2014	B-08
13270-2014	B-09
13270-2015	B-08
13270-2015	B-09
13270-2016	B-08
13271-2247	B-09
14002-2316	B-03
14002-2317	B-03
14020-2009	B-08
14020-2009	B-09
14020-2057	C-03
14025-2027	B-08
14025-2027	B-09
14090-2059	B-10
14090-2060	B-08
14090-2060	B-09
15003-2547	B-08
15003-2938	B-09
16009-2114	B-08
16009-2114	B-09
16014-2064	B-08
16021-2008	B-08
16021-2008	B-09
16025-2173	B-08
16025-2173	B-09
16030-2087	B-08
16030-2087	B-09
16073-2176	B-08
16073-2176	B-09
16087-2059	B-08
16087-2059	B-09
16087-2060	B-08
21050-2240	B-06
21130-2056	B-06
21169-2051	B-06
21171-2195	B-06
214B0514	B-05
214B0520	B-05
234B0555	B-10
241B0512	B-10
26011-2113	B-06
315B0800	C-03
315B1000	B-06
32052-2215	B-11
32099-2272	C-03
32099-2326	B-07
34001-2082	B-03
410B0800	C-03
410B1000	B-06
43028-2065	B-08
43028-2082	B-08
43028-2082	B-09
43028-2093	B-09
46075-2067	C-03
49019-2111	B-11
49043-2071	B-08
49043-2071	B-09
49049-2075	C-04
49070-2630	B-10
49080-2173	C-03
49088-2442	C-03
49089-2385	B-05
49089-2386	B-05
49089-2553	B-05
49089-2553	B-05
49116-2064	B-11
49116-2066	B-09
49119-2173	B-04
51001-2268	B-11
51048-2078	B-11
510A3100	B-06
54012-2362	B-07
551A0410	B-03
551A0610	B-03
56039-2701	D-03
56070-2020	D-03
56080-2106	D-03
59066-2747	B-05
59066-2794	B-05
59101-2067	C-03
59106-2077	C-03
92002-2150	B-03
92009-2053	B-08
92009-2053	B-09
92009-2061	B-08
92009-2061	B-09
92009-2115	B-03
92009-2218	C-03
92009-2234	B-05
92009-2249	B-08
92009-2249	B-09
92009-2249	C-03
92009-2324	B-10
92009-2361	B-08
92009-2361	B-09
92009-2383	B-11
92009-2449	B-10
92009-2449	B-10
92015-2097	B-08
92015-2097	B-09
92025-2135	B-04
92025-2136	B-04
92025-2137	B-04
92026-2125	C-04
92033-2058	B-04
92033-2070	B-08
92033-2070	B-09
92037-2139	B-11
92043-2099	B-08
92043-2099	B-09
92043-2210	C-04
92045-2005	B-03
92049-2206	B-03
92055-2067	B-08
92055-2077	B-09
92055-2207	B-09
92059-2103	B-06
92063-2454	B-09
92070-2060	B-06
92071-2097	B-06
92071-2142	B-11
92071-2143	B-06
92081-2245	B-08
92081-2245	B-09
92081-2249	B-08
92081-2272	B-08
92081-2272	B-09
92081-2274	C-03
92081-2275	C-03
92081-2318	C-03
92081-2339	B-08
92081-2340	B-08
92081-2340	B-09
92143-2162	B-11
92144-2009	B-09
92144-2390	C-04
92150-2180	B-10
92150-2182	B-06
92170-2041	B-06
92170-2080	B-11
92172-2060	B-05
92172-2060	B-05
92172-2062	B-10
92172-2062	B-10
92172-2086	B-09
92190-2157	B-11
92190-2161	B-11
92200-2064	C-04
99996-6060	B-11