PARTS CATALOG

2-STROKE ENGINE

TH043D

PRODUCT CODE	NOTE
TH043D-AS50	BRUSH-CUTTER
TH043D-BS50	

Kawasaki
KAWASAKI HEAVY INDUSTRIES, LTD

P/N 99907-2123-02

PARTS CATALOG INTRODUCTION

This parts catalog lists parts and sub-assemblies provided as service parts.
When it becomes necessary to replace parts, always use KAWASAKI GENUINE PARTS which have passed strict inspection which guarantees quality and performance.

1. HOW TO ORDER PARTS

1) When ordering the parts, be sure to use the parts catalog corresponding to the product code. Check the product revision codes on the product and the catalog.
   Product Code (example) : FA130D–AA00
   Product Revision Code
2) Specify the part code (all digits) exactly as listed in this catalog on your parts order.
3) The parts not shown in the illustrations of this catalog are not sold separately; only the complete units or next higher assemblies illustrated are supplied as the service parts.

2. EXPLANATION OF PARTS CATALOG FORMAT

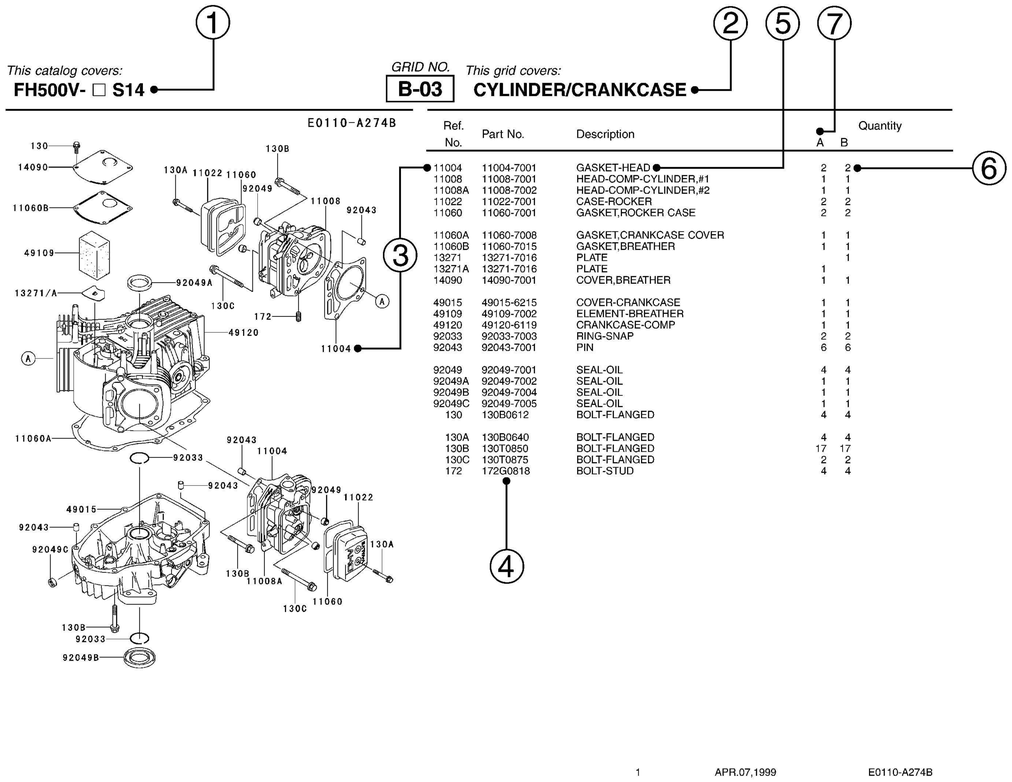

1) Product Code

This code describes the product code covered by this catalog. The product revision code, which is a part of the product code, is omitted.

2) Part Group Title

This title is the representative name for the group of parts illustrated on the page.

3) Reference Number

The reference numbers are shown on the illustration and the list as the link between them.

4) Part Number

This is the key of your parts ordering.
Three kinds of part number are used in this catalog.

a. Structure 1
   □□□□□□—□□□□—□□
   □□□□□□—□□□□□□
   Part Revision Code

b. Structure 2
   □□□□□—□□□□—□□
   Color Code for Painted Part

c. Standard Hardware Number
   (for bolts, nuts, washer, or the like)
   □□□□□□□□
   Size Code
   Material and Surface Treatment Code
   Item Code

5) Description and Additional Information

The part name, the location, the size, and the serial number as additional information, etc. are described here. Use them to find out and check the part required.
When a part number is changed without change of the product revision code and the changed parts are not interchangeable, the serial number of the product is noted as follows;

(	– FA130 – 100001)	: Affected units are from beginning of the product of the product code up to and including this serial number.
(FA130 – 100002	–)	: Affected units are from this serial number and above.
(FA130 – 100002	– FA130 – 110001)	: Affected units are in this serial number range.

6) Quantity

The figure shows quantity of the part required at the indicated position on the illustration and for the specified product revision code.
The asterisk (*) on this column means the part can be used as the substitute on the product and is supplied until the stock is exhausted.
Note:Some small parts will be supplied by units.
Example: If six (6) bolts are ordered and the minimum quantity per unit is five (5), two (2), units of the bolt will be delivered.

7) Product Revision Code

This Code indicates an important change which affects the service parts interchangeability.

3. ABBREVIATIONS

#.....Number	FR.....Front	RH.....Right Hand
&.....And	G.....Gram	RPM.....Revolutions Per Minute
(+).....Plus	HEX.....Hexagonal	RR.....Rear
(–).....Minus	ID=.....Inside Diameter	STD.....Standard
2ND.....Second	IN.....Inch	T.....Teeth
3RD.....Third	L=.....Length	T=.....Thickness
4TH.....Fourth	LH.....Left Hand	U/S.....Under Size
A.....Ampere	LWR.....Lower	UPP.....Upper
AR.....As Required	MM.....Millimeter	V.....Volt
ASSY.....Assembly	O/S.....Over Size	W.....Watt
CNT.....Center	OD=.....Outside Diameter	
COMP.....Complete	REF.....Reference	

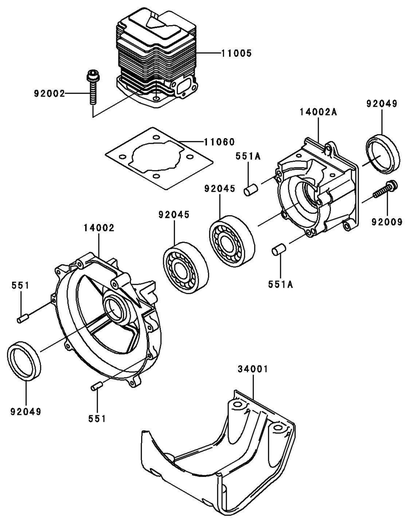

B-03 CYLINDER/CRANKCASE

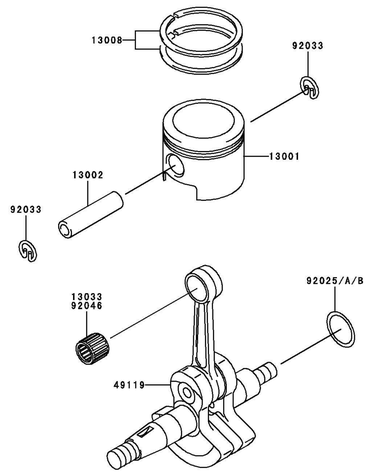

B-04 PISTON/CRANKSHAFT

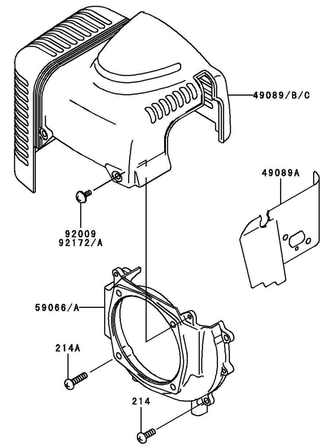

B-05 COOLING-EQUIPMENT

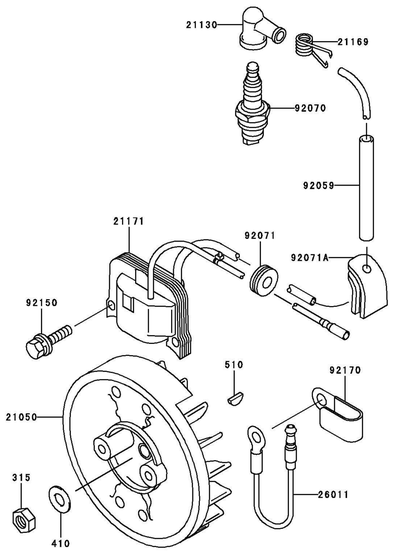

B-06 ELECTRIC-EQUIPMENT

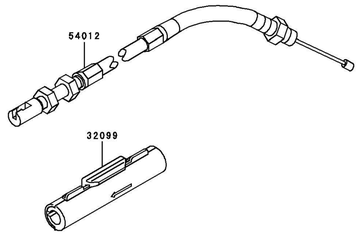

B-07 CONTROL-EQUIPMENT

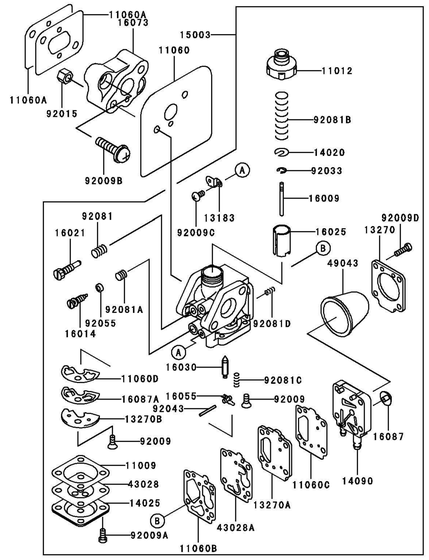

B-08 CARBURETOR

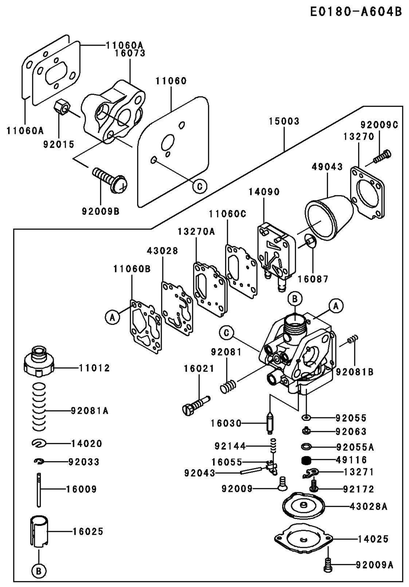

B-09 CARBURETOR

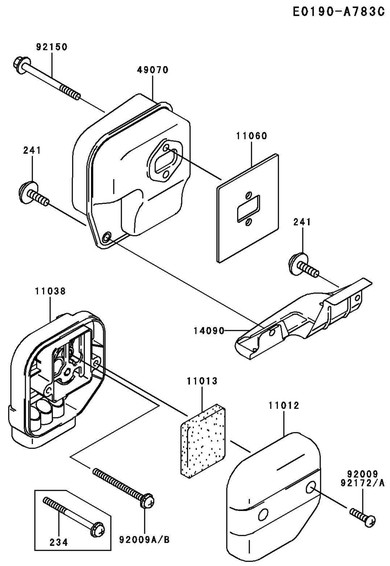

B-10 AIR-FILTER/MUFFLER

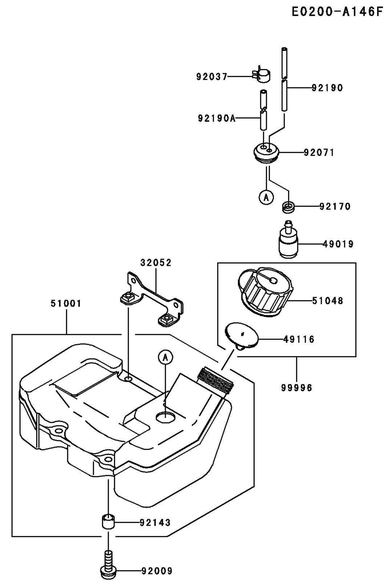

B-11 FUEL-TANK/FUEL-VALVE

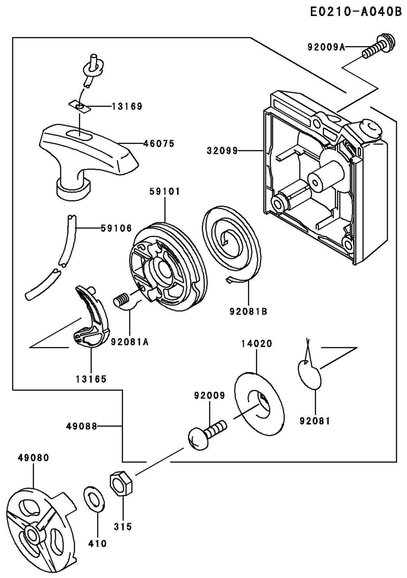

C-03 STARTER

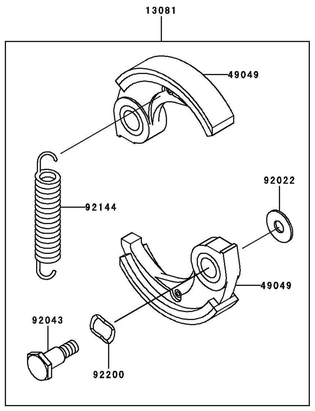

C-04 P.T.O-EQUIPMENT

F0290-A842A

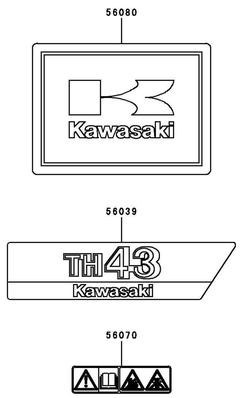

D-03 LABEL

E0110-A060A

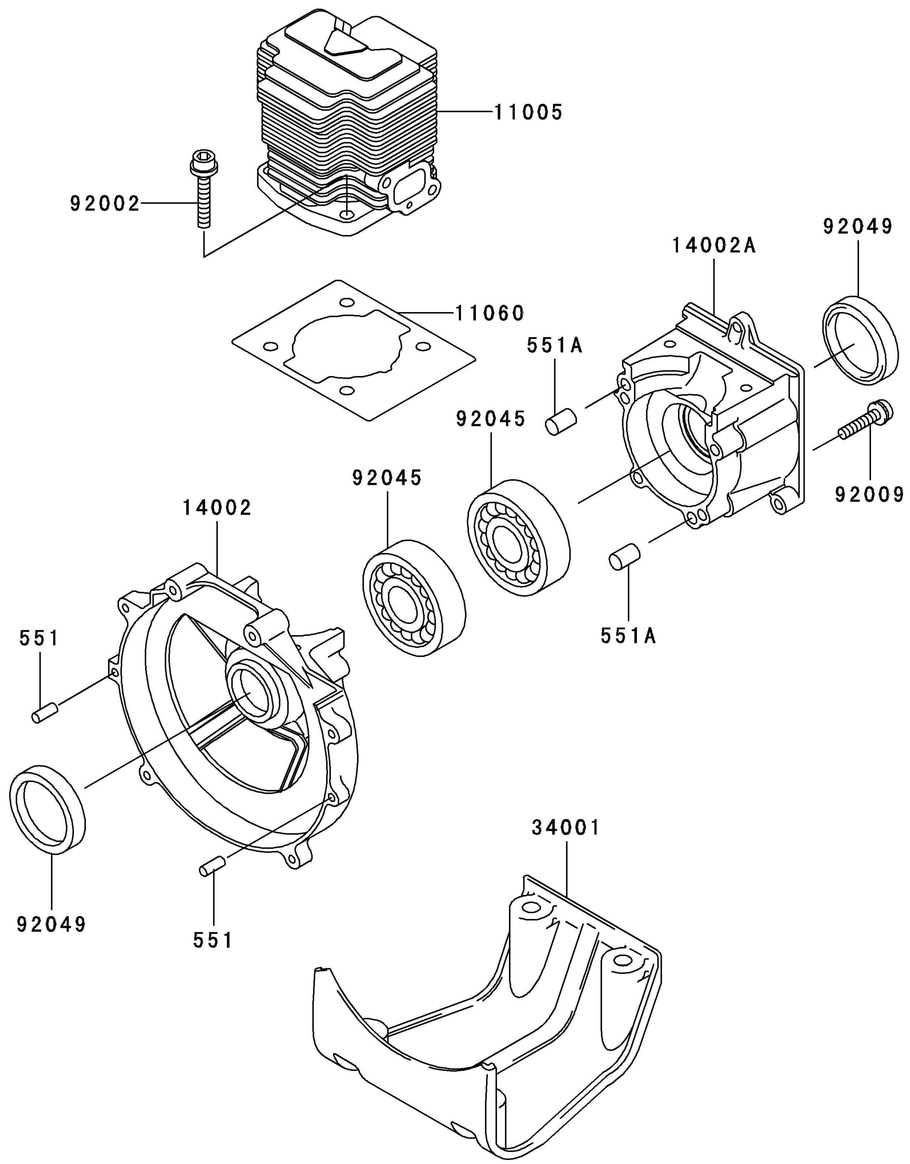

Ref. No.	Part No.	Description	Quantity A	Quantity B
11005	11005-2122	CYLINDER-ENGINE	1	1
11060	11060-2296	GASKET,CYLINDER	1	1
14002	14002-2316	CRANKCASE	1	1
14002A	14002-2317	CRANKCASE	1	1
34001	34001-2082	STAND	1	1
92002	92002-2150	BOLT	4	4
92009	92009-2115	SCREW	4	4
92045	92045-2005	BEARING-BALL,6202C3	2	2
92049	92049-2206	SEAL-OIL	2	2
551	551A0410	PIN-DOWEL	2	2
551A	551A0610	PIN-DOWEL	2	2

E0120-A054E

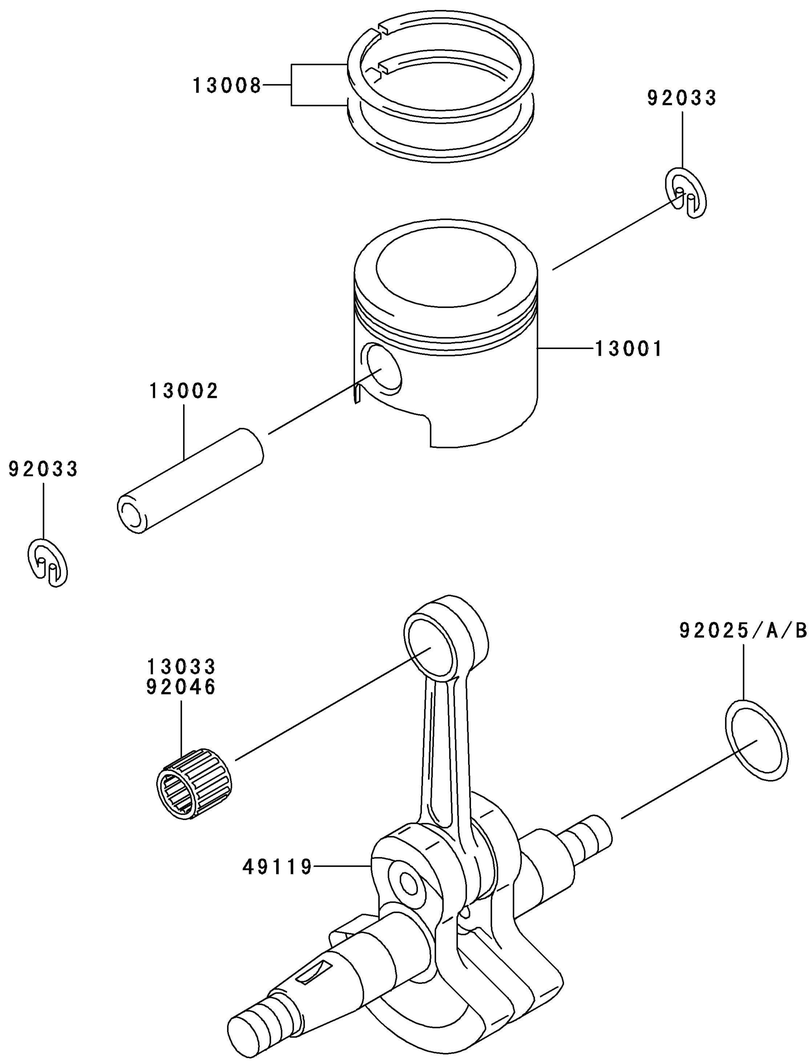

Ref. No.	Part No.	Description	Quantity A	Quantity B
13001	13001-2140	PISTON-ENGINE	1	1
13002	13002-2065	PIN-PISTON	1	1
13008	13008-6052	RING-SET-PISTON	1	1
13033	13033-2061	BEARING-SMALL END		1
49119	49119-2173	CRANKSHAFT-ASSY	1	1
92025	92025-2135	SHIM,T=0.20	AR	AR
92025A	92025-2136	SHIM,T=0.40	AR	AR
92025B	92025-2137	SHIM,T=0.60	AR	AR
92033	92033-2058	RING-SNAP	2	2
92046	13033-2005	BEARING-NEEDLE	1	

E0150-A334Q

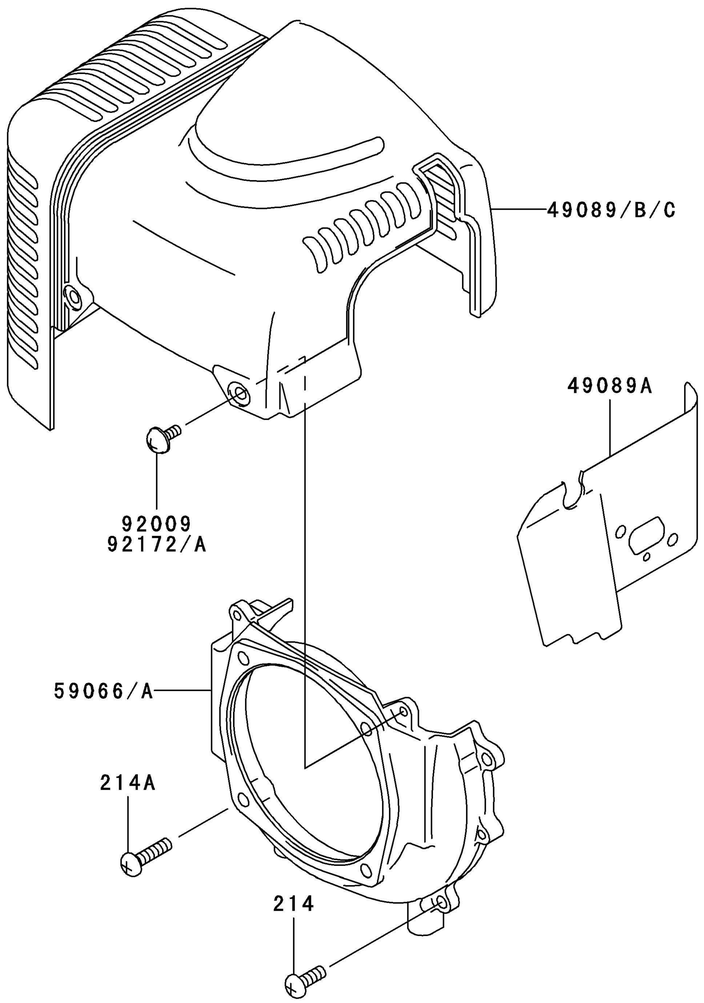

Ref. No.	Part No.	Description	Quantity A	Quantity B
49089	49089-2385	SHROUD-ENGINE	*	
	(	- TH043-203805)		
49089A	49089-2386	SHROUD-ENGINE	1	1
49089B	49089-2553	SHROUD-ENGINE		1
49089C	49089-2553	SHROUD-ENGINE	1	
	(	TH043-203806 -)		
59066	59066-2747	HOUSING-FAN	1	
59066A	59066-2794	HOUSING-FAN		1
92009	92009-2234	SCREW,4X10	*	
92172	92172-2060	SCREW,4X10		2
92172A	92172-2060	SCREW,4X10	2	
214	214B0514	SCREW-PAN+-	3	3
214A	214B0520	SCREW-PAN+-	1	1

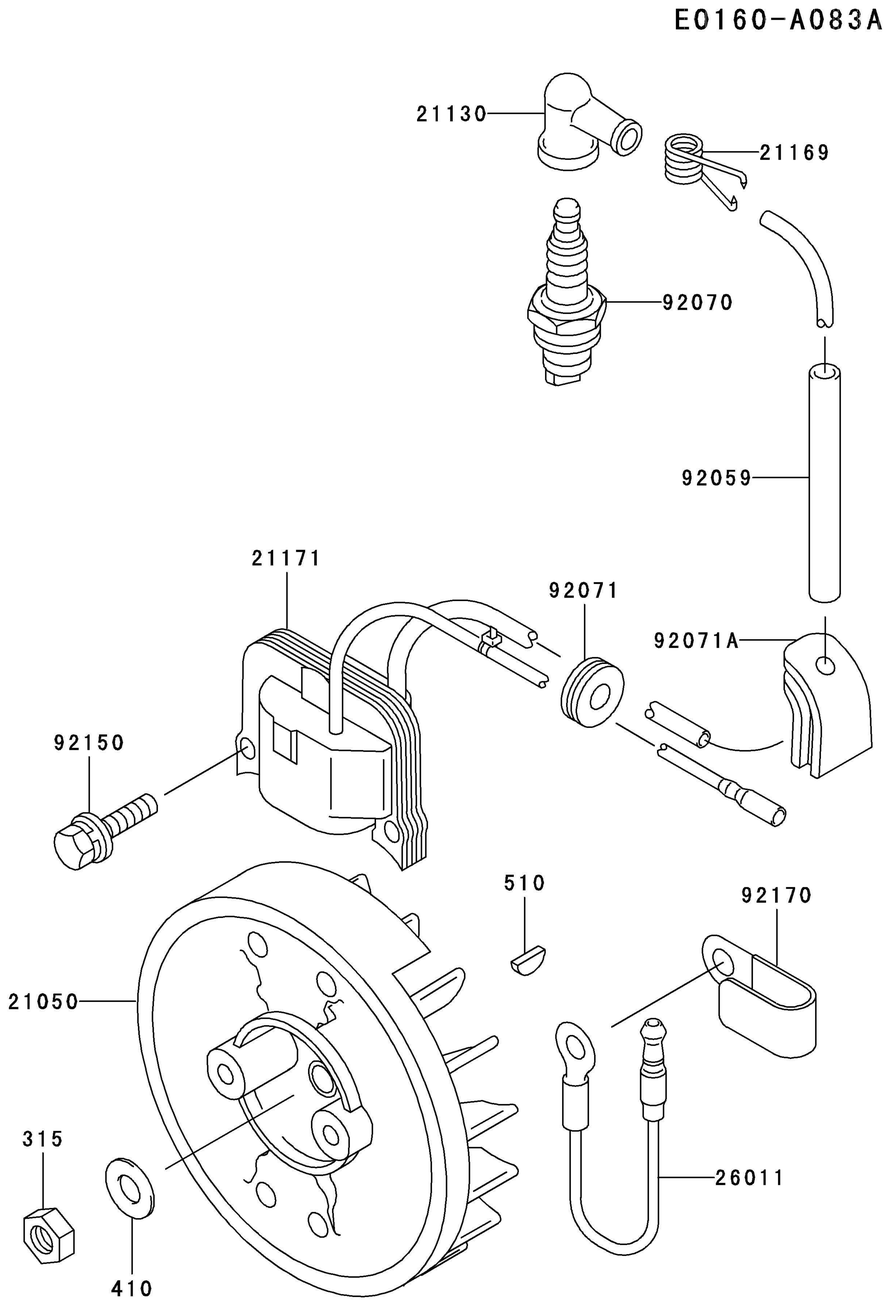

Ref. No.	Part No.	Description	Quantity A	Quantity B
21050	21050-2240	FLYWHEEL	1	1
21130	21130-2056	CAP-SPARK PLUG	1	1
21169	21169-2051	TERMINAL	1	1
21171	21171-2195	COIL-ASSY-IGNITION	1	1
26011	26011-2113	WIRE-LEAD	1	1
92059	92059-2103	TUBE,6X7.4X108	1	1
92070	92070-2060	PLUG-SPARK,BMR6A(NGK),SOLID	1	1
92071	92071-2097	GROMMET	1	1
92071A	92071-2143	GROMMET,IGNITION COIL	1	1
92150	92150-2182	BOLT,5X18	2	2
92170	92170-2041	CLAMP	1	1
315	315B1000	NUT-HEX-FINE	1	1
410	410B1000	W-PLAIN-S	1	1
510	510A3100	KEY-WOODRUFF	1	1

E0170-A239A

Ref. No.	Part No.	Description	Quantity A	Quantity B
32099	32099-2326	CASE	1	1
54012	54012-2362	CABLE-THROTTLE	1	1

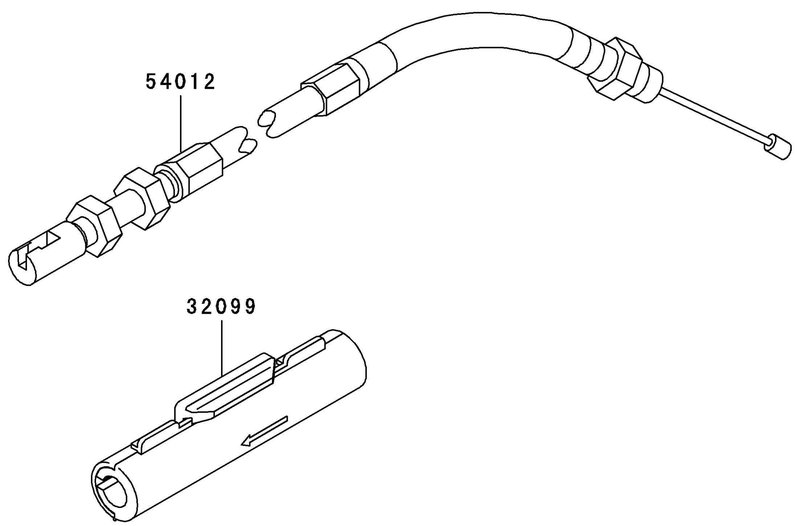

E0180-A315A

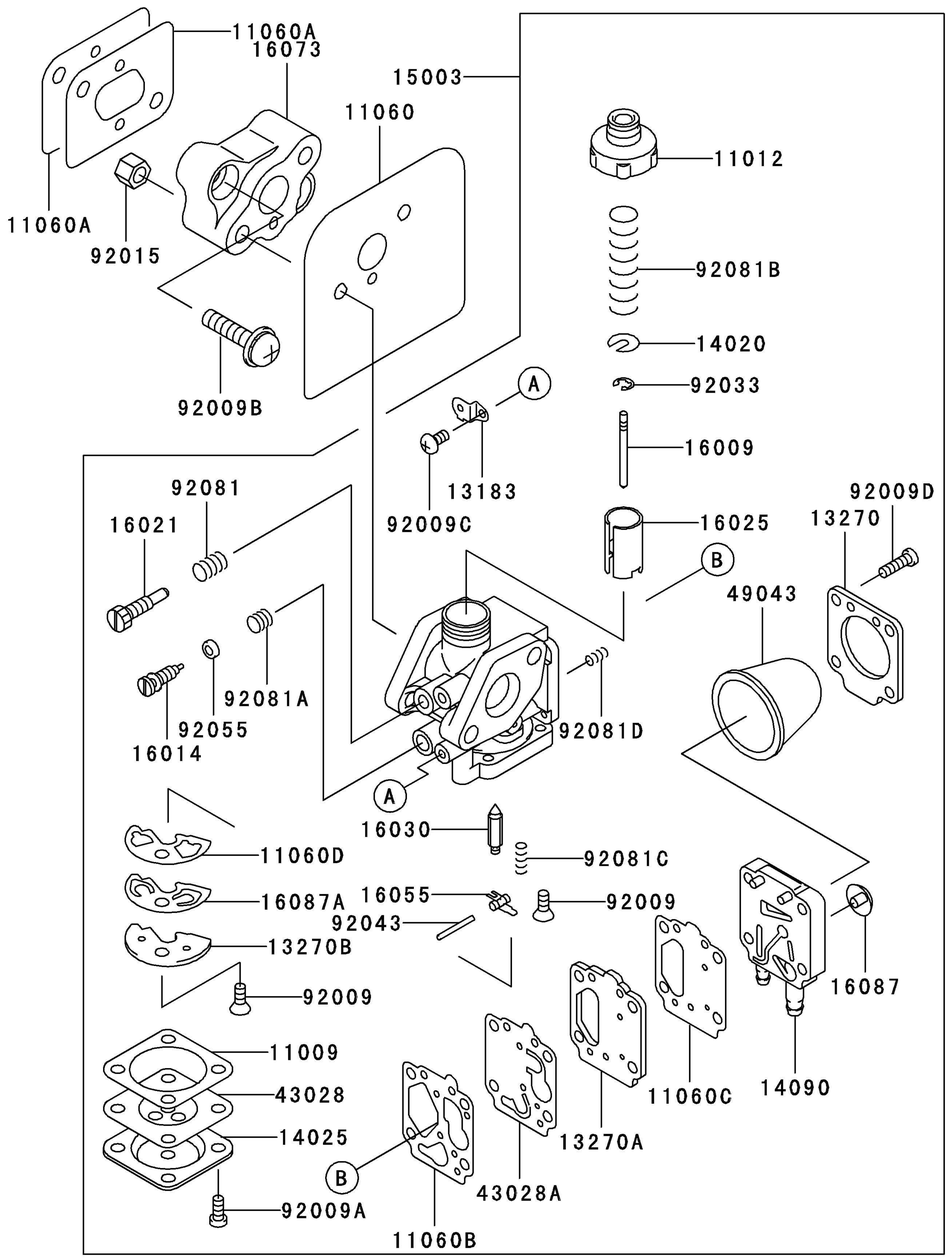

Ref. No.	Part No.	Description	Quantity A	Quantity B
11009	11009-2366	GASKET	1	
11012	11012-2185	CAP,BODY	1	
11060	11060-2298	GASKET,CARBURETOR	1	
11060A	11060-2299	GASKET,INSULATOR	2	
11060B	11060-2305	GASKET	1	
11060C	11060-2306	GASKET	1	
11060D	11060-2307	GASKET	1	
13183	13183-2506	PLATE	1	
13270	13270-2014	PLATE	1	
13270A	13270-2015	PLATE	1	
13270B	13270-2016	PLATE	1	
14020	14020-2009	RETAINER,VALVE	1	
14025	14025-2027	COVER	1	
14090	14090-2060	COVER	1	
15003	15003-2675	CARBURETOR-ASSY	1	
16009	16009-2127	NEEDLE-JET,#A159	1	
16014	16014-2069	SCREW-PILOT AIR	1	
16021	16021-2008	SCREW-THROTTLE STOP	1	
16025	16025-2173	VALVE-THROTTLE	1	
16030	16030-2087	VALVE-FLOAT	1	
16055	13168-2118	ARM-FLOAT	1	
16073	16073-2176	INSULATOR	1	
16087	16087-2059	VALVE-CHECK	1	
16087A	16087-2060	VALVE-CHECK	1	
43028	43028-2065	DIAPHRAGM	1	
43028A	43028-2082	DIAPHRAGM	1	
49043	49043-2071	PUMP-PRIMING	1	
92009	92009-2053	SCREW	2	
92009A	92009-2061	SCREW	4	
92009B	92009-2249	SCREW,5X20	2	
92009C	92009-2342	SCREW	1	
92009D	92009-2361	SCREW,3X14	4	
92015	92015-2097	NUT,M5	2	
92033	92033-2070	RING-SNAP	1	
92043	92043-2099	PIN	1	
92055	92055-2067	RING-O	1	
92081	92081-2245	SPRING	1	
92081A	92081-2249	SPRING	1	
92081B	92081-2272	SPRING	1	
92081C	92081-2339	SPRING	1	
92081D	92081-2340	SPRING	1	

E0180-A604B

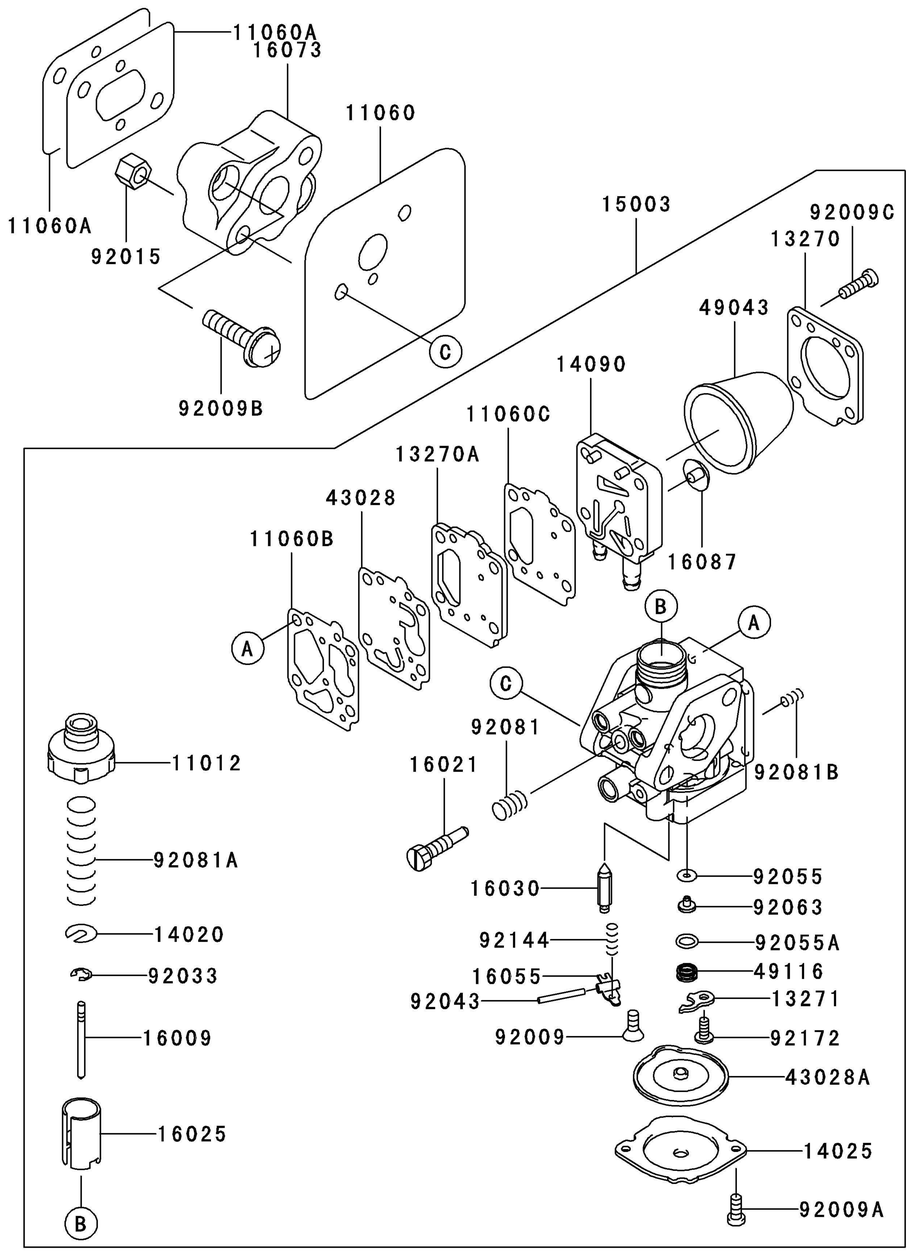

Ref. No.	Part No.	Description	Quantity A	Quantity B
11012	11012-2185	CAP,BODY		1
11060	11060-2298	GASKET,CARBURETOR		1
11060A	11060-2299	GASKET,INSULATOR		2
11060B	11060-2305	GASKET		1
11060C	11060-2306	GASKET		1
13270	13270-2014	PLATE		1
13270A	13270-2015	PLATE		1
13271	13271-2247	PLATE		1
14020	14020-2009	RETAINER,VALVE		1
14025	14025-2027	COVER		1
14090	14090-2060	COVER		1
15003	15003-2934	CARBURETOR-ASSY		1
16009	16009-2114	NEEDLE-JET,#114		1
16021	16021-2008	SCREW-THROTTLE STOP		1
16025	16025-2173	VALVE-THROTTLE		1
16030	16030-2087	VALVE-FLOAT		1
16055	13168-2118	ARM-FLOAT		1
16073	16073-2176	INSULATOR		1
16087	16087-2059	VALVE-CHECK		1
43028	43028-2082	DIAPHRAGM		1
43028A	43028-2093	DIAPHRAGM		1
49043	49043-2071	PUMP-PRIMING		1
49116	49116-2066	VALVE-ASSY		1
92009	92009-2053	SCREW		1
92009A	92009-2061	SCREW		2
92009B	92009-2249	SCREW,5X20		2
92009C	92009-2361	SCREW,3X14		4
92015	92015-2097	NUT,M5		2
92033	92033-2070	RING-SNAP		1
92043	92043-2099	PIN		1
92055	92055-2077	RING-O		1
92055A	92055-2207	RING-O		1
92063	92063-2444	JET-MAIN,#58		1
92081	92081-2245	SPRING		1
92081A	92081-2272	SPRING		1
92081B	92081-2340	SPRING		1
92144	92144-2009	SPRING		1
92172	92172-2086	SCREW		1

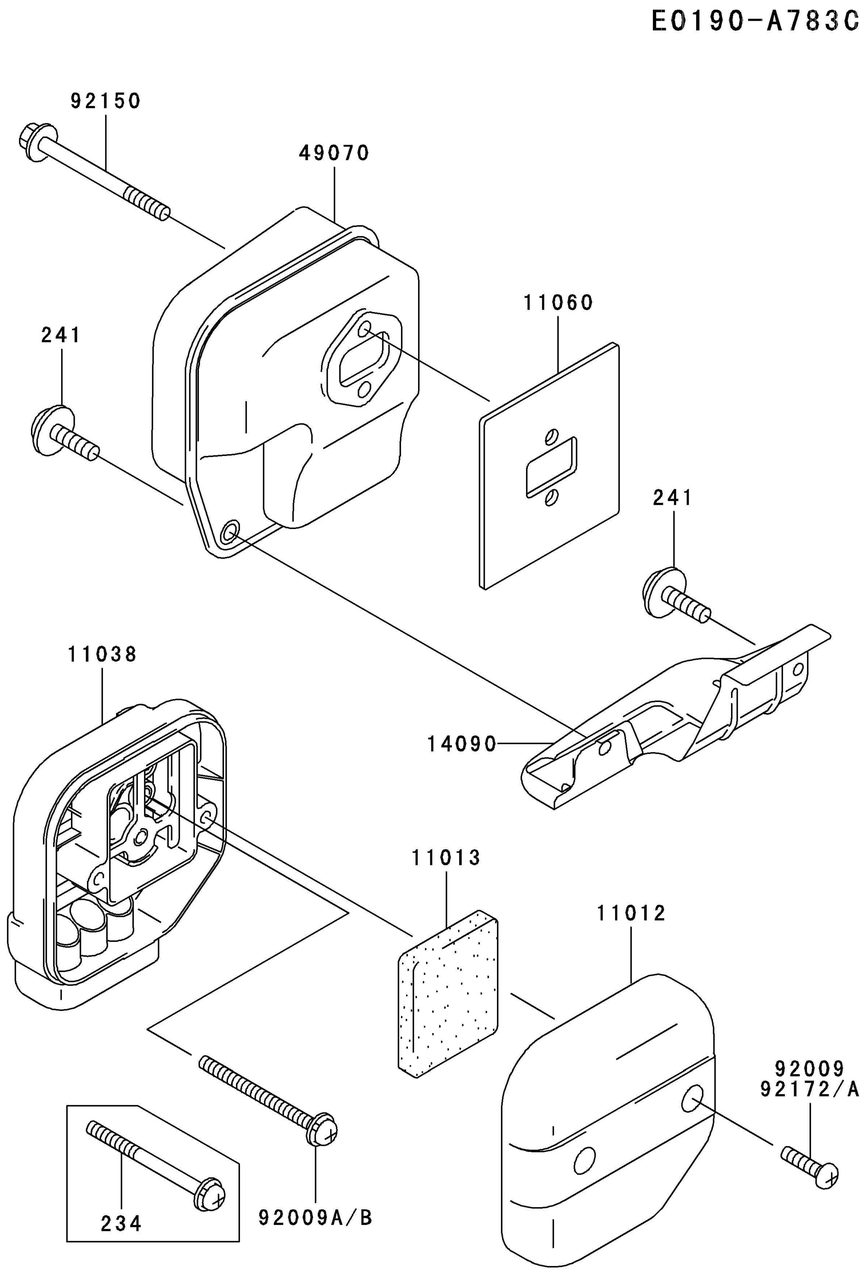

Ref. No.	Part No.	Description	Quantity A	Quantity B
11012	11012-2349	CAP,AIR FILTER	1	1
11013	11013-2081	ELEMENT-AIR FILTER	1	1
11038	11038-2055	CASE-ASSY-AIR FILTER	1	1
11060	11060-2297	GASKET,MUFFLER	1	1
14090	14090-2059	COVER,MUFFLER	1	1
49070	49070-2630	MUFFLER-COMP	1	1
92009	92009-2324	SCREW	*	
92009A	92009-2449	SCREW,5X55		2
92009B	92009-2449	SCREW,5X55	2	
92150	92150-2180	BOLT,6X65	2	2
92172	92172-2062	SCREW		2
92172A	92172-2062	SCREW	2	
234	234B0555	SCREW-PAN-WSP+-	*	
241	241B0512	SCREW-PAN-WP+-	2	2

E0200-A146F

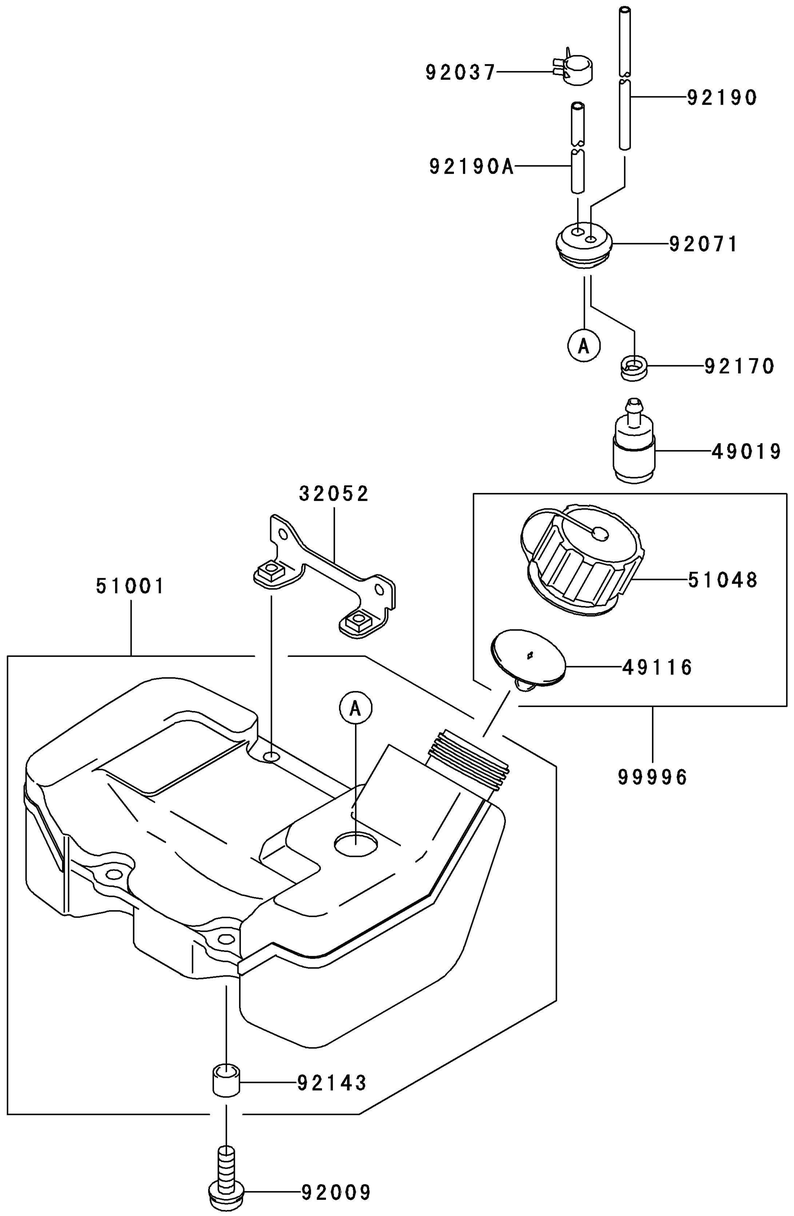

Ref. No.	Part No.	Description	Quantity A	Quantity B
32052	32052-2215	BRACKET-TANK	1	1
49019	49019-2111	FILTER-FUEL	1	1
49116	49116-2064	VALVE-ASSY	1	1
51001	51001-2268	TANK-COMP-FUEL	1	1
51048	51048-2078	CAP-ASSY-TANK	1	1
92009	92009-2383	SCREW,5X20	4	4
92037	92037-2139	CLAMP	1	1
92071	92071-2142	GROMMET,FUEL TANK	1	1
92143	92143-2162	COLLAR	4	4
92170	92170-2080	CLAMP,FUEL FILTER	1	1
92190	92190-2157	TUBE,3X5X200	1	1
92190A	92190-2161	TUBE,3X6X100	1	1
99996	99996-6060	KIT,CAP-ASSY-TANK	1	1

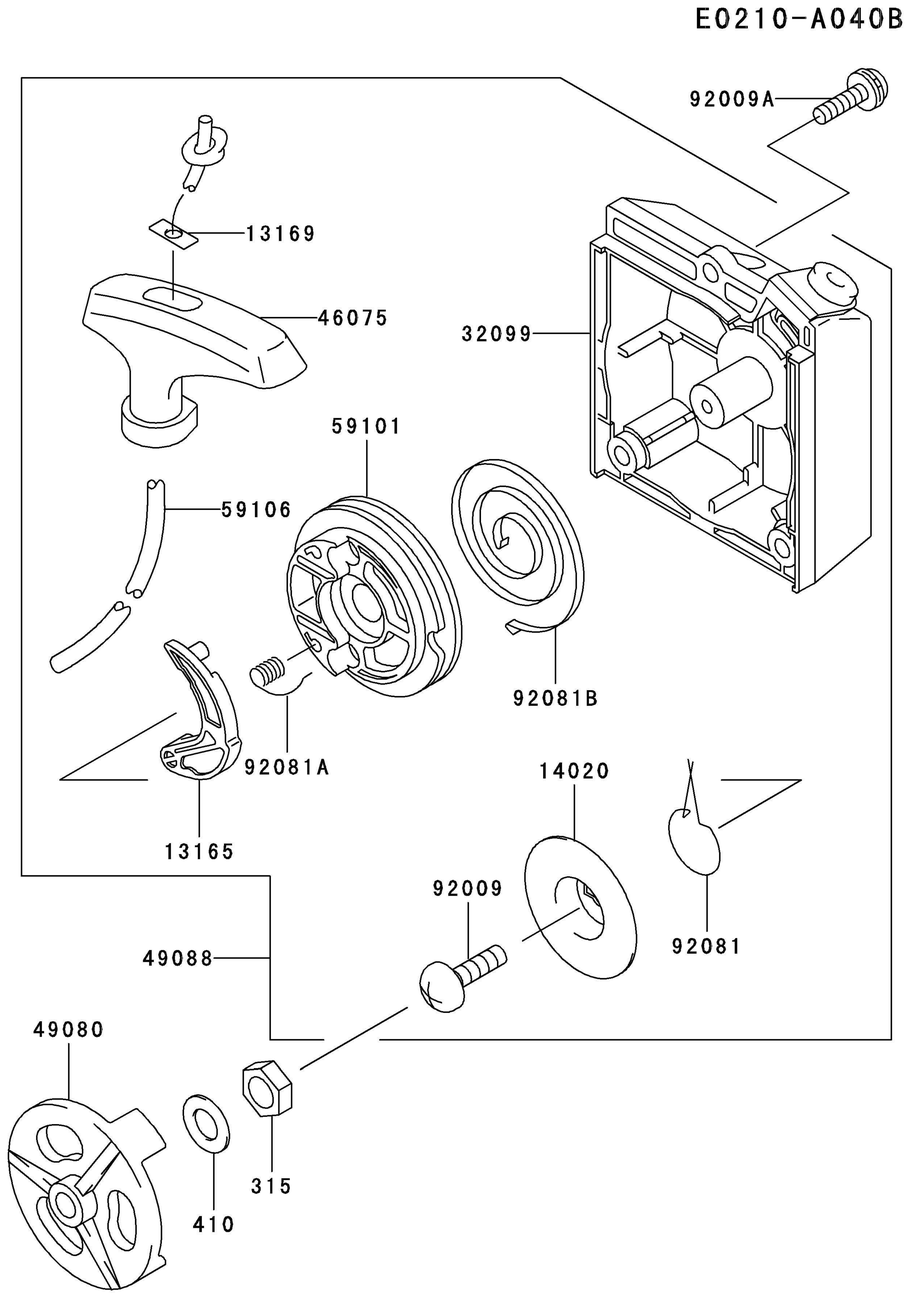

Ref. No.	Part No.	Description	Quantity A	Quantity B
13165	13165-2058	PAWL,RECOIL STARTER	1	1
13169	13169-2386	PLATE,RECOIL STARTER	1	1
14020	14020-2057	RETAINER,RECOIL STARTER	1	1
32099	32099-2272	CASE,RECOIL STARTER	1	1
46075	46075-2067	GRIP,RECOIL STARTER	1	1
49080	49080-2173	PULLEY-STARTING	1	1
49088	49088-2442	STARTER-RECOIL	1	1
59101	59101-2067	REEL,RECOIL STARTER	1	1
59106	59106-2077	ROPE,3.8X1200	1	1
92009	92009-2218	SCREW,5X12	1	1
92009A	92009-2249	SCREW,5X20	3	3
92081	92081-2274	SPRING	1	1
92081A	92081-2275	SPRING	1	1
92081B	92081-2318	SPRING	1	1
315	315B0800	NUT-HEX-FINE	1	1
410	410B0800	W-PLAIN-S	1	1

E0220-A008A

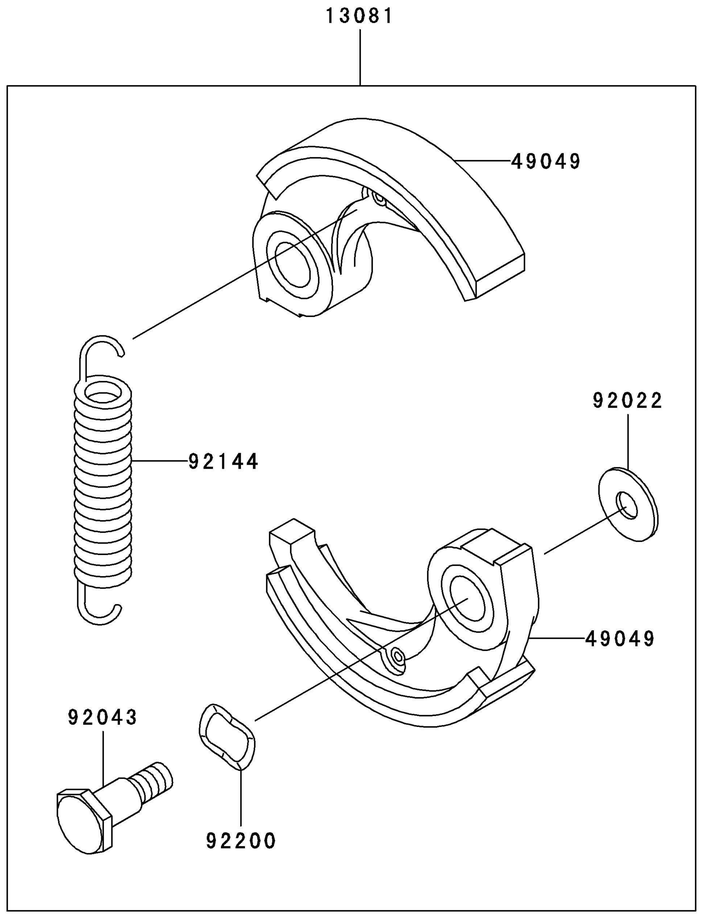

Ref. No.	Part No.	Description	Quantity A	Quantity B
13081	13081-2220	CLUTCH-ASSY	1	1
49049	49049-2075	SHOE-CLUTCH	2	2
92022	92026-2125	WASHER	2	2
92043	92043-2210	PIN,CLUTCH	2	2
92144	92144-2390	SPRING	1	1
92200	92200-2064	WASHER,SPRING,10.5X14.5X0.3	2	2

F0290-A842A

Ref. No.	Part No.	Description	Quantity A	Quantity B
56039	56039-2700	LABEL-PRODUCT	1	1
56070	56070-2020	LABEL-WARNING	1	1
56080	56080-2106	LABEL-BRAND	1	1

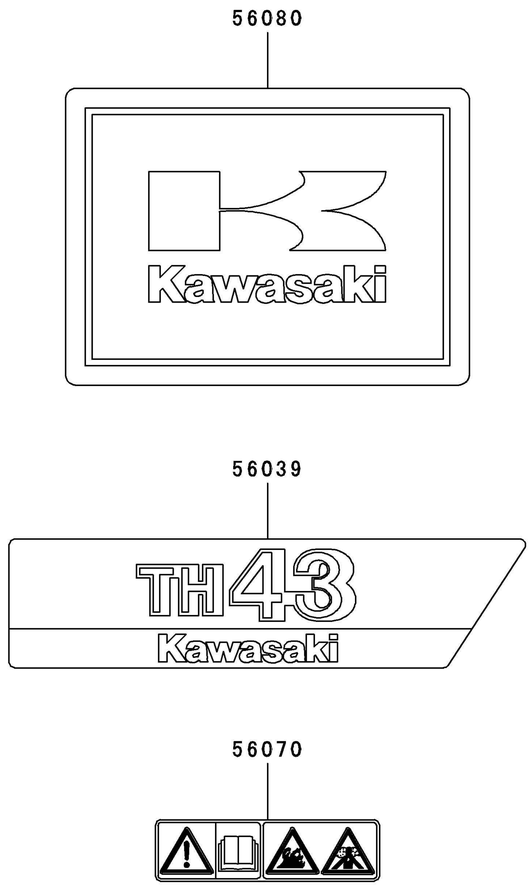

PART NAME INDEX

AIR-FILTER/MUFFLER B-10
CARBURETOR B-08
CARBURETOR B-09
CONTROL-EQUIPMENT B-07
COOLING-EQUIPMENT B-05
CYLINDER/CRANKCASE B-03
ELECTRIC-EQUIPMENT B-06
FUEL-TANK/FUEL-VALVE B-11
LABEL D-03
P.T.O-EQUIPMENT C-04
PISTON/CRANKSHAFT B-04
STARTER C-03

This catalog covers:

TH043D- □ S50

GRID NO. **H-10** *This grid covers:*

NUMERICAL PARTS INDEX

Part No.	Grid No.
11005-2122	B-03
11009-2366	B-08
11012-2185	B-08
11012-2185	B-09
11012-2349	B-10
11013-2081	B-10
11038-2055	B-10
11060-2296	B-03
11060-2297	B-10
11060-2298	B-08
11060-2298	B-09
11060-2299	B-08
11060-2299	B-09
11060-2305	B-08
11060-2305	B-09
11060-2306	B-08
11060-2306	B-09
11060-2307	B-08
13001-2140	B-04
13002-2065	B-04
13008-6052	B-04
13033-2005	B-04
13033-2061	B-04
13081-2220	C-04
13165-2058	C-03
13168-2118	B-08
13168-2118	B-09
13169-2386	C-03
13183-2506	B-08
13270-2014	B-08
13270-2014	B-09
13270-2015	B-08
13270-2015	B-09
13270-2016	B-08
13271-2247	B-09
14002-2316	B-03
14002-2317	B-03
14020-2009	B-08
14020-2009	B-09
14020-2057	C-03
14025-2027	B-08
14025-2027	B-09
14090-2059	B-10
14090-2060	B-08
14090-2060	B-09
15003-2675	B-08
15003-2934	B-09
16009-2114	B-09
16009-2127	B-08
16014-2069	B-08
16021-2008	B-08
16021-2008	B-09
16025-2173	B-08
16025-2173	B-09
16030-2087	B-08
16030-2087	B-09
16073-2176	B-08
16073-2176	B-09
16087-2059	B-08
16087-2059	B-09
16087-2060	B-08
21050-2240	B-06
21130-2056	B-06
21169-2051	B-06
21171-2195	B-06
214B0514	B-05
214B0520	B-05
234B0555	B-10
241B0512	B-10
26011-2113	B-06
315B0800	C-03
315B1000	B-06
32052-2215	B-11
32099-2272	C-03
32099-2326	B-07
34001-2082	B-03
410B0800	C-03
410B1000	B-06
43028-2065	B-08
43028-2082	B-08
43028-2082	B-09
43028-2093	B-09
46075-2067	C-03
49019-2111	B-11
49043-2071	B-08
49043-2071	B-09
49049-2075	C-04
49070-2630	B-10
49080-2173	C-03
49088-2442	C-03
49089-2385	B-05
49089-2386	B-05
49089-2553	B-05
49089-2553	B-05
49116-2064	B-11
49116-2066	B-09
49119-2173	B-04
51001-2268	B-11
51048-2078	B-11
510A3100	B-06
54012-2362	B-07
551A0410	B-03
551A0610	B-03
56039-2700	D-03
56070-2020	D-03
56080-2106	D-03
59066-2747	B-05
59066-2794	B-05
59101-2067	C-03
59106-2077	C-03
92002-2150	B-03
92009-2053	B-08
92009-2053	B-09
92009-2061	B-08
92009-2061	B-09
92009-2115	B-03
92009-2218	C-03
92009-2234	B-05
92009-2249	B-08
92009-2249	B-09
92009-2249	C-03
92009-2324	B-10
92009-2342	B-08
92009-2361	B-08
92009-2361	B-09
92009-2383	B-11
92009-2449	B-10
92009-2449	B-10
92015-2097	B-08
92015-2097	B-09
92025-2135	B-04
92025-2136	B-04
92025-2137	B-04
92026-2125	C-04
92033-2058	B-04
92033-2070	B-08
92033-2070	B-09
92037-2139	B-11
92043-2099	B-08
92043-2099	B-09
92043-2210	C-04
92045-2005	B-03
92049-2206	B-03
92055-2067	B-08
92055-2077	B-09
92055-2207	B-09
92059-2103	B-06
92063-2444	B-09
92070-2060	B-06
92071-2097	B-06
92071-2142	B-11
92071-2143	B-06
92081-2245	B-08
92081-2245	B-09
92081-2249	B-08
92081-2272	B-08
92081-2272	B-09
92081-2274	C-03
92081-2275	C-03
92081-2318	C-03
92081-2339	B-08
92081-2340	B-08
92081-2340	B-09
92143-2162	B-11
92144-2009	B-09
92144-2390	C-04
92150-2180	B-10
92150-2182	B-06
92170-2041	B-06
92170-2080	B-11
92172-2060	B-05
92172-2060	B-05
92172-2062	B-10
92172-2062	B-10
92172-2086	B-09
92190-2157	B-11
92190-2161	B-11
92200-2064	C-04
99996-6060	B-11