PARTS CATALOG

2-STROKE ENGINE

TH034D

PRODUCT CODE	NOTE
TH034D-AA50	STD
TH034D-BA50	

Kawasaki
KAWASAKI HEAVY INDUSTRIES, LTD

P/N 99907-2053-02

PARTS CATALOG INTRODUCTION

This parts catalog lists parts and sub-assemblies provided as service parts.
When it becomes necessary to replace parts, always use KAWASAKI GENUINE PARTS which have passed strict inspection which guarantees quality and performance.

1. HOW TO ORDER PARTS

1) When ordering the parts, be sure to use the parts catalog corresponding to the product code. Check the product revision codes on the product and the catalog.
   Product Code (example) : FA130D–AA00
   Product Revision Code
2) Specify the part code (all digits) exactly as listed in this catalog on your parts order.
3) The parts not shown in the illustrations of this catalog are not sold separately; only the complete units or next higher assemblies illustrated are supplied as the service parts.

2. EXPLANATION OF PARTS CATALOG FORMAT

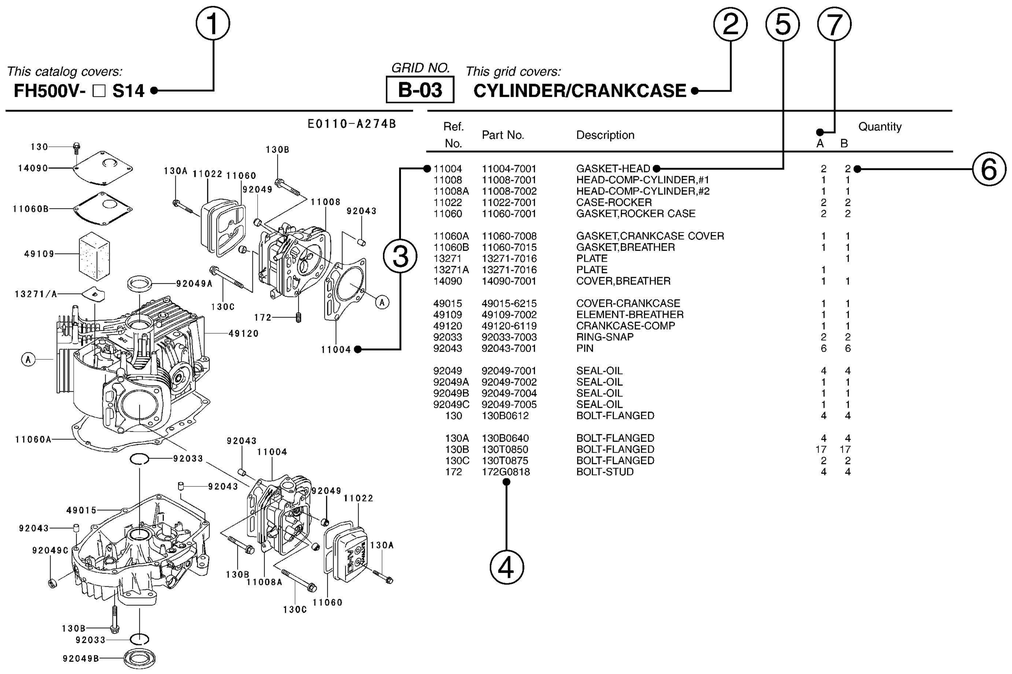

1) Product Code

This code describes the product code covered by this catalog. The product revision code, which is a part of the product code, is omitted.

2) Part Group Title

This title is the representative name for the group of parts illustrated on the page.

3) Reference Number

The reference numbers are shown on the illustration and the list as the link between them.

4) Part Number

This is the key of your parts ordering.
Three kinds of part number are used in this catalog.

a. Structure 1
   □□□□□□—□□□□—□□
   □□□□□□—□□□□□□
   Part Revision Code

b. Structure 2
   □□□□□—□□□□—□□
   Color Code for Painted Part

c. Standard Hardware Number
   (for bolts, nuts, washer, or the like)
   □□□□□□□□
   Size Code
   Material and Surface Treatment Code
   Item Code

5) Description and Additional Information

The part name, the location, the size, and the serial number as additional information, etc. are described here. Use them to find out and check the part required.
When a part number is changed without change of the product revision code and the changed parts are not interchangeable, the serial number of the product is noted as follows;

(	– FA130 – 100001)	: Affected units are from beginning of the product of the product code up to and including this serial number.
(FA130 – 100002	–)	: Affected units are from this serial number and above.
(FA130 – 100002	– FA130 – 110001)	: Affected units are in this serial number range.

6) Quantity

The figure shows quantity of the part required at the indicated position on the illustration and for the specified product revision code.
The asterisk (*) on this column means the part can be used as the substitute on the product and is supplied until the stock is exhausted.
Note:Some small parts will be supplied by units.
Example: If six (6) bolts are ordered and the minimum quantity per unit is five (5), two (2), units of the bolt will be delivered.

7) Product Revision Code

This Code indicates an important change which affects the service parts interchangeability.

3. ABBREVIATIONS

#.....Number	FR.....Front	RH.....Right Hand
&.....And	G.....Gram	RPM.....Revolutions Per Minute
(+).....Plus	HEX.....Hexagonal	RR.....Rear
(–).....Minus	ID=.....Inside Diameter	STD.....Standard
2ND.....Second	IN.....Inch	T.....Teeth
3RD.....Third	L=.....Length	T=.....Thickness
4TH.....Fourth	LH.....Left Hand	U/S.....Under Size
A.....Ampere	LWR.....Lower	UPP.....Upper
AR.....As Required	MM.....Millimeter	V.....Volt
ASSY.....Assembly	O/S.....Over Size	W.....Watt
CNT.....Center	OD=.....Outside Diameter	
COMP.....Complete	REF.....Reference	

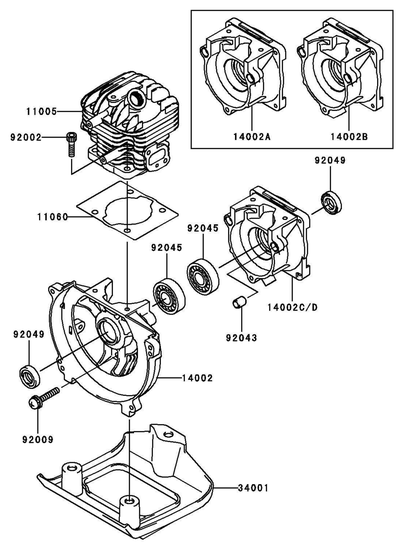

B-03 CYLINDER/CRANKCASE

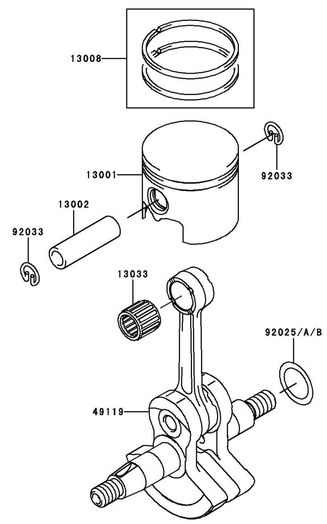

B-04 PISTON/CRANKSHAFT

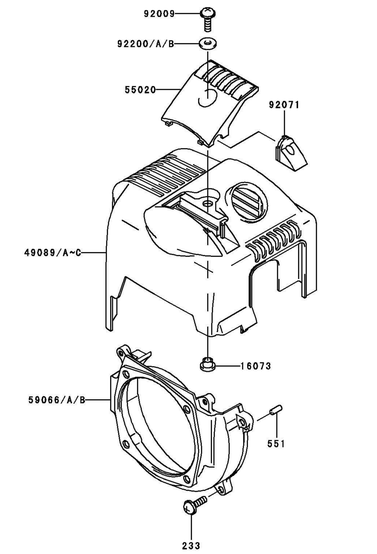

B-05 COOLING-EQUIPMENT

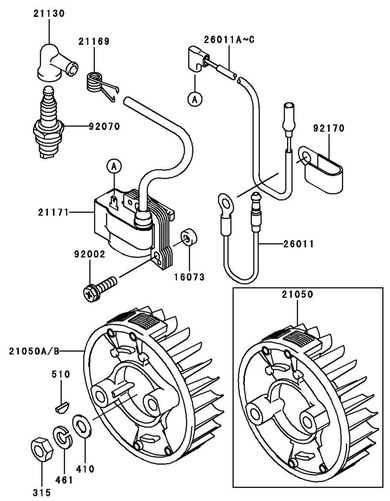

B-06 ELECTRIC-EQUIPMENT

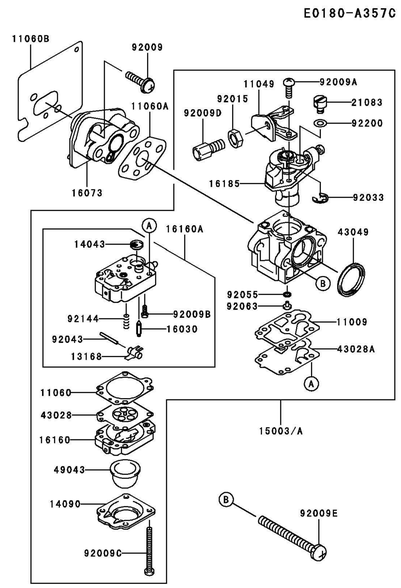

B-07 CARBURETOR

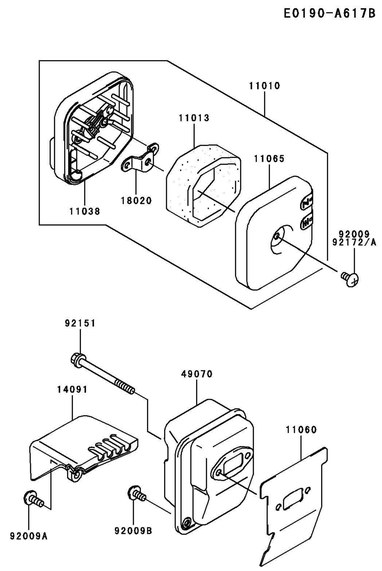

B-08 AIR-FILTER/MUFFLER

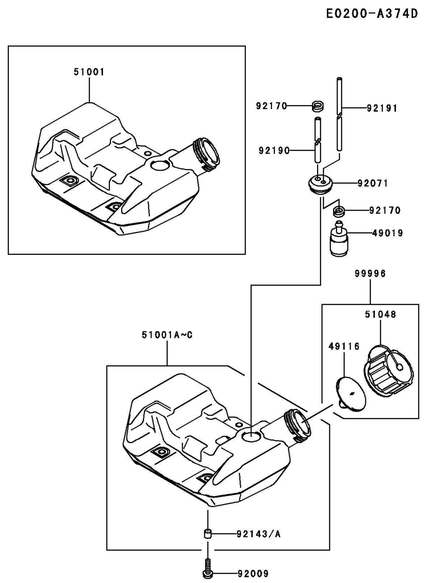

B-09 FUEL-TANK/FUEL-VALVE

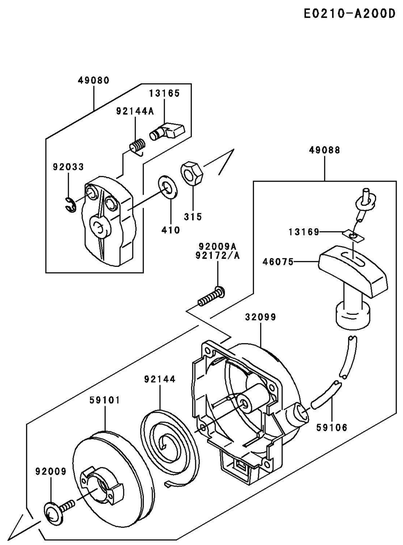

B-10 STARTER

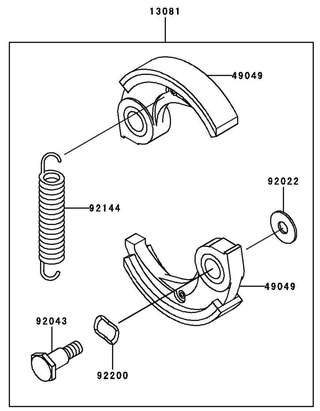

B-11 P.T.O-EQUIPMENT

F0290-A691A

C-03 LABEL

E0110-A335B

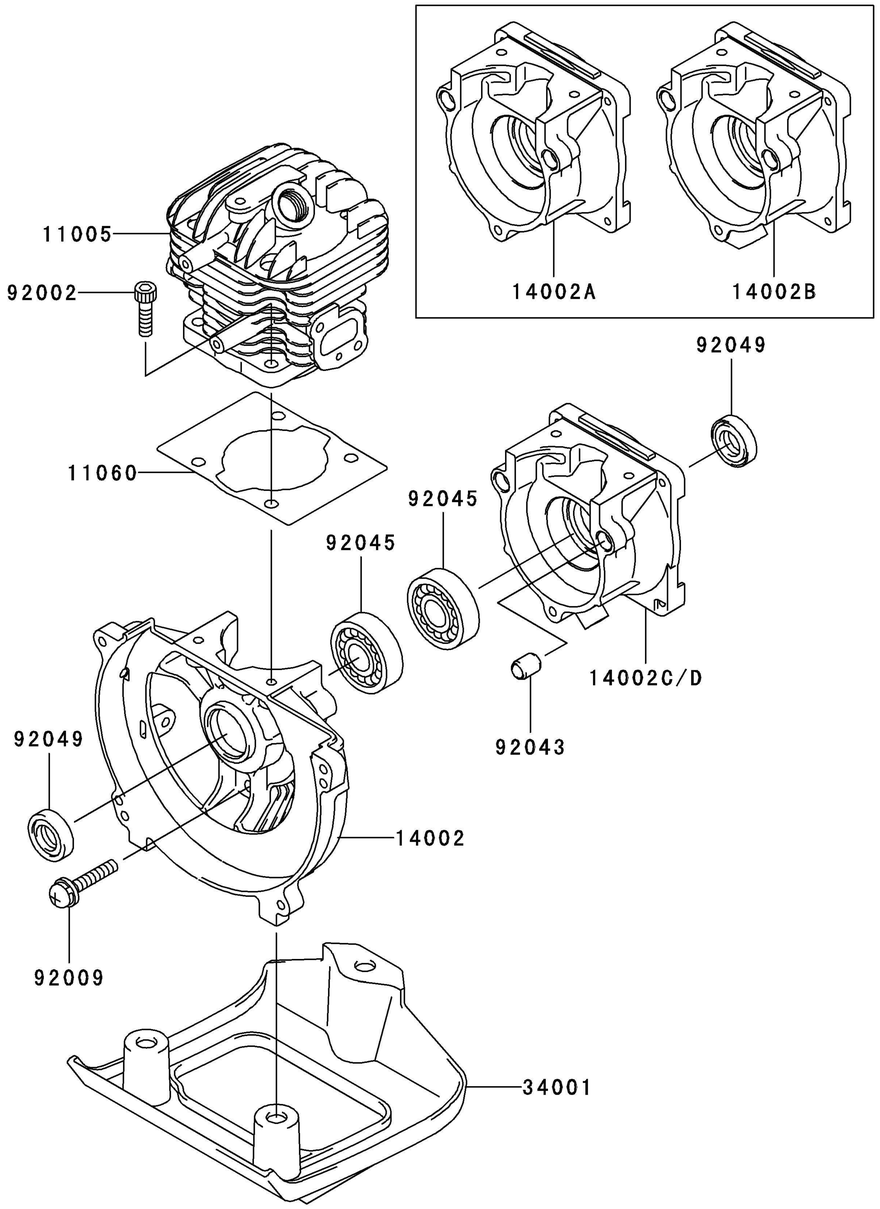

Ref. No.	Part No.	Description	Quantity A	Quantity B
11005	11005-2140	CYLINDER-ENGINE	1	1
11060	11060-2435	GASKET,CYLINDER	1	1
14002	14002-2331	CRANKCASE	1	1
14002A	14002-2332	CRANKCASE	*	
	(	- TH034-043608)		
14002B	14002-2335	CRANKCASE	*	
	(	TH034-043609 -)		
14002C	14002-2347	CRANKCASE		1
14002D	14002-2347	CRANKCASE	1	
34001	34001-2086	STAND	1	1
92002	92002-2163	BOLT	4	4
92009	92009-2115	SCREW	3	3
92043	92043-1302	PIN	2	2
92045	92045-2058	BEARING-BALL,6201C3	2	2
92049	92049-2108	SEAL-OIL	2	2

E0120-A147A

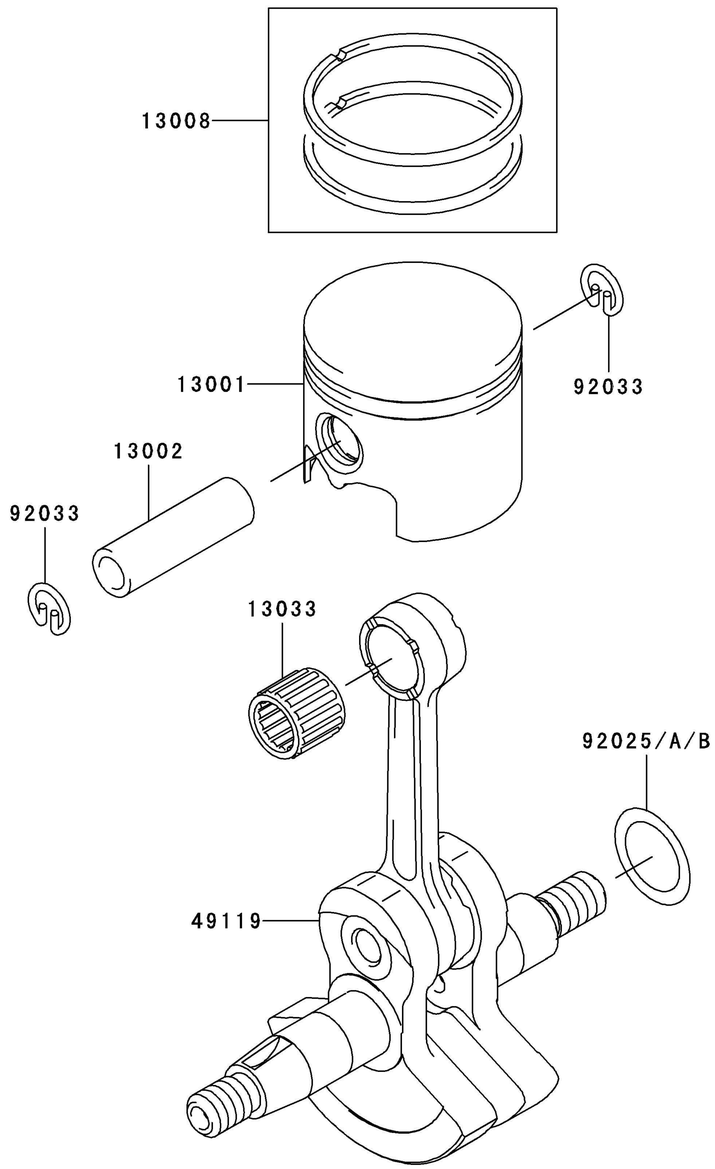

Ref. No.	Part No.	Description	Quantity A	Quantity B
13001	13001-2147	PISTON-ENGINE	1	1
13002	13002-2059	PIN-PISTON	1	1
13008	13008-6045	RING-SET-PISTON	1	1
13033	13033-2052	BEARING-SMALL END	1	1
49119	49119-2190	CRANKSHAFT-ASSY	1	1
92025	92025-2104	SHIM,T=0.20	AR	AR
92025A	92025-2105	SHIM,T=0.40	AR	AR
92025B	92025-2106	SHIM,T=0.60	AR	AR
92033	92033-2061	RING-SNAP	2	2

E0150-A304J

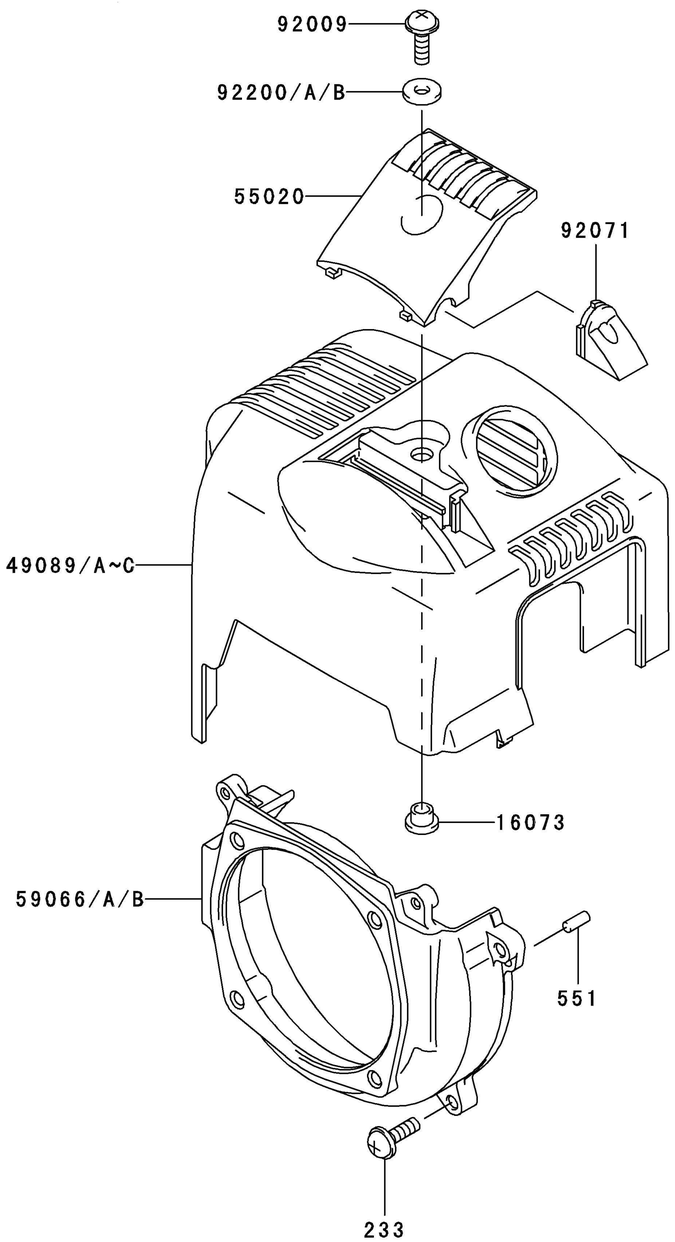

Ref. No.	Part No.	Description	Quantity A	Quantity B
16073	16073-2197	INSULATOR	1	1
49089	49089-2479	SHROUD-ENGINE	*	
49089A	49089-2535	SHROUD-ENGINE	*	
49089B	49089-2598	SHROUD-ENGINE		1
49089C	49089-2598	SHROUD-ENGINE	1	
55020	55020-2125	GUARD	1	1
59066	59066-2724-9B	HOUSING-FAN	1	
59066A	59066-2724-9B	HOUSING-FAN		*
59066B	59066-2793-9B	HOUSING-FAN		1
92009	92009-2394	SCREW,5X16	1	1
92071	92071-2157	GROMMET	1	1
92200	92200-2063	WASHER,5.5X13.8X2.0	*	
92200A	92200-2156	WASHER		1
92200B	92200-2156	WASHER	1	
233	233B0516	SCREW-PAN-WP+-	4	4
551	551A0410	PIN-DOWEL	2	2

E0160-A826F

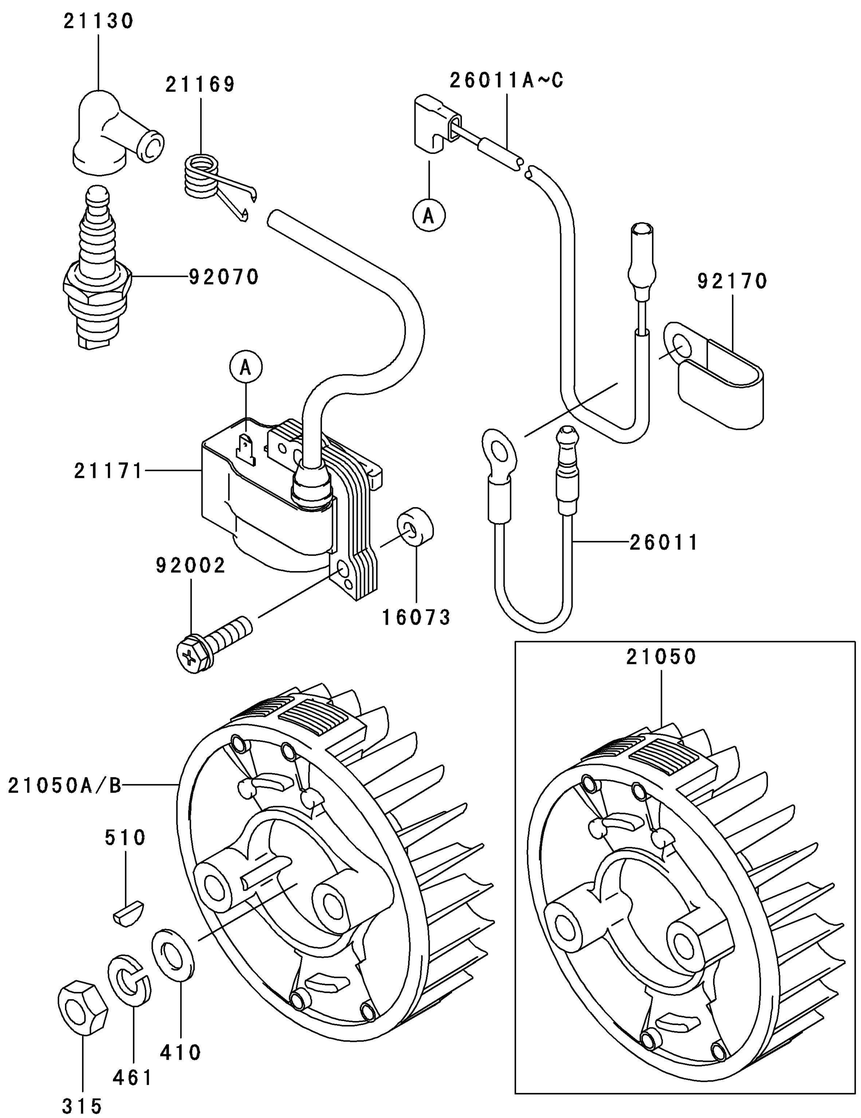

Ref. No.	Part No.	Description	Quantity A	Quantity B
16073	16073-2198	INSULATOR	2	2
21050	21050-2282	FLYWHEEL	*	
21050A	21050-2301	FLYWHEEL		1
21050B	21050-2301	FLYWHEEL	1	
21130	21130-2056	CAP-SPARK PLUG	1	1
21169	21169-2051	TERMINAL	1	1
21171	21171-2234	COIL-ASSY-IGNITION	1	1
26011	26011-2113	WIRE-LEAD	1	1
26011A	26011-2361	WIRE-LEAD,L=230	*	
26011B	26011-2376	WIRE-LEAD,L=230		1
26011C	26011-2376	WIRE-LEAD,L=230	1	
92002	92002-2197	BOLT,4X20	2	2
92070	92070-2108	PLUG-SPARK,BPMR6A(NGK),SOLID	1	1
92170	92170-2041	CLAMP	1	1
315	315B0800	NUT-HEX-FINE	1	1
410	410B0800	W-PLAIN-S	1	1
461	461F0800	WASHER-SPRING	1	1
510	510A3100	KEY-WOODRUFF	1	1

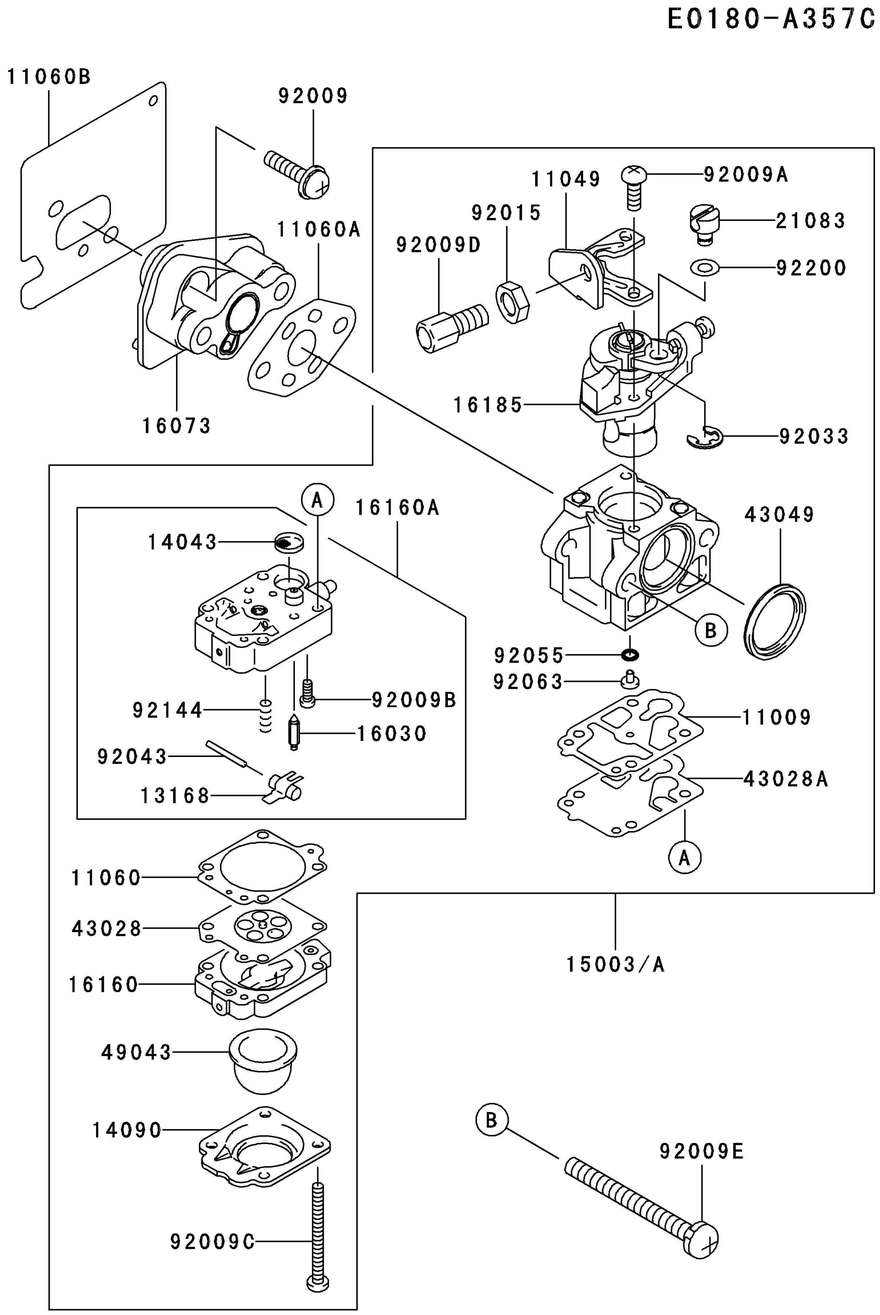

Ref. No.	Part No.	Description	Quantity A	Quantity B
11009	11009-2757	GASKET	1	1
11049	11049-2006	BRACKET	1	1
11060	11060-2111	GASKET	1	1
11060A	11060-2404	GASKET,CARBURETOR	1	1
11060B	11060-2437	GASKET,INSULATOR	1	1
13168	16055-2051	LEVER	1	1
14043	14043-2051	FILTER	1	1
14090	14090-2017	COVER,PRIMER PUMP	1	1
15003	15003-2688	CARBURETOR-ASSY	1	
15003A	15003-2936	CARBURETOR-ASSY		1
16030	16030-2078	VALVE-FLOAT	1	1
16073	16073-2202	INSULATOR	1	1
16160	16160-2089	BODY	1	1
16160A	16160-2103	BODY	1	1
16185	16185-2024	VALVE-ASSY-THROTTLE	1	
21083	21083-2073	ARM	1	1
43028	43028-2054	DIAPHRAGM	1	1
43028A	43028-2067	DIAPHRAGM	1	1
43049	43049-2060	PACKING	1	1
49043	49043-2067	PUMP-PRIMING	1	1
92009	92009-2249	SCREW,5X20	2	2
92009A	92009-2277	SCREW	2	2
92009B	92009-2336	SCREW	1	1
92009C	92009-2337	SCREW	4	4
92009D	92009-2354	SCREW	1	1
92009E	92009-2420	SCREW,5X52	2	2
92015	92015-2145	NUT	1	1
92033	92033-2078	RING-SNAP	1	1
92043	92043-2094	PIN	1	1
92055	92055-2147	RING-O	1	1
92063	92063-2356	JET-MAIN,#37.5	1	1
92144	92144-2308	SPRING	1	1
92200	92200-2074	WASHER	1	1

E0190-A617B

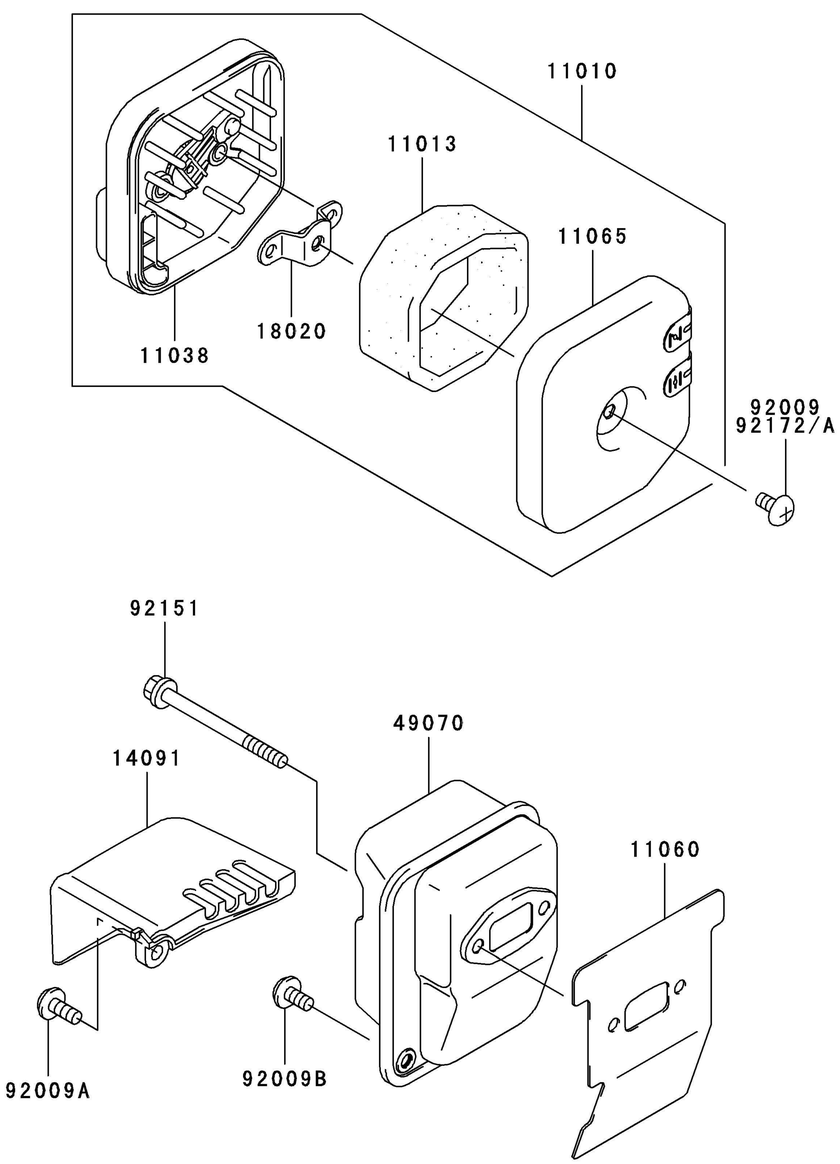

Ref. No.	Part No.	Description	Quantity A	Quantity B
11010	11010-2526	FILTER-ASSY-AIR	1	1
11013	11013-2184	ELEMENT-AIR FILTER	1	1
11038	11038-2069	CASE-ASSY-AIR FILTER	1	1
11060	11060-2436	GASKET,MUFFLER	1	1
11065	11065-2072	CAP,AIR FILTER	1	1
14091	14091-2053	COVER,MUFFLER	1	1
18020	18020-2082	BAFFLE	1	1
49070	49070-2693	MUFFLER-COMP	1	1
92009	92009-1002	SCREW,5X10	*	
92009A	92009-2393	SCREW,5X12	1	1
92009B	92009-2410	SCREW,5X10	1	1
92151	92151-2108	BOLT,5X60	2	2
92172	92172-0007	SCREW,5X10		1
92172A	92172-0007	SCREW,5X10	1	

E0200-A374D

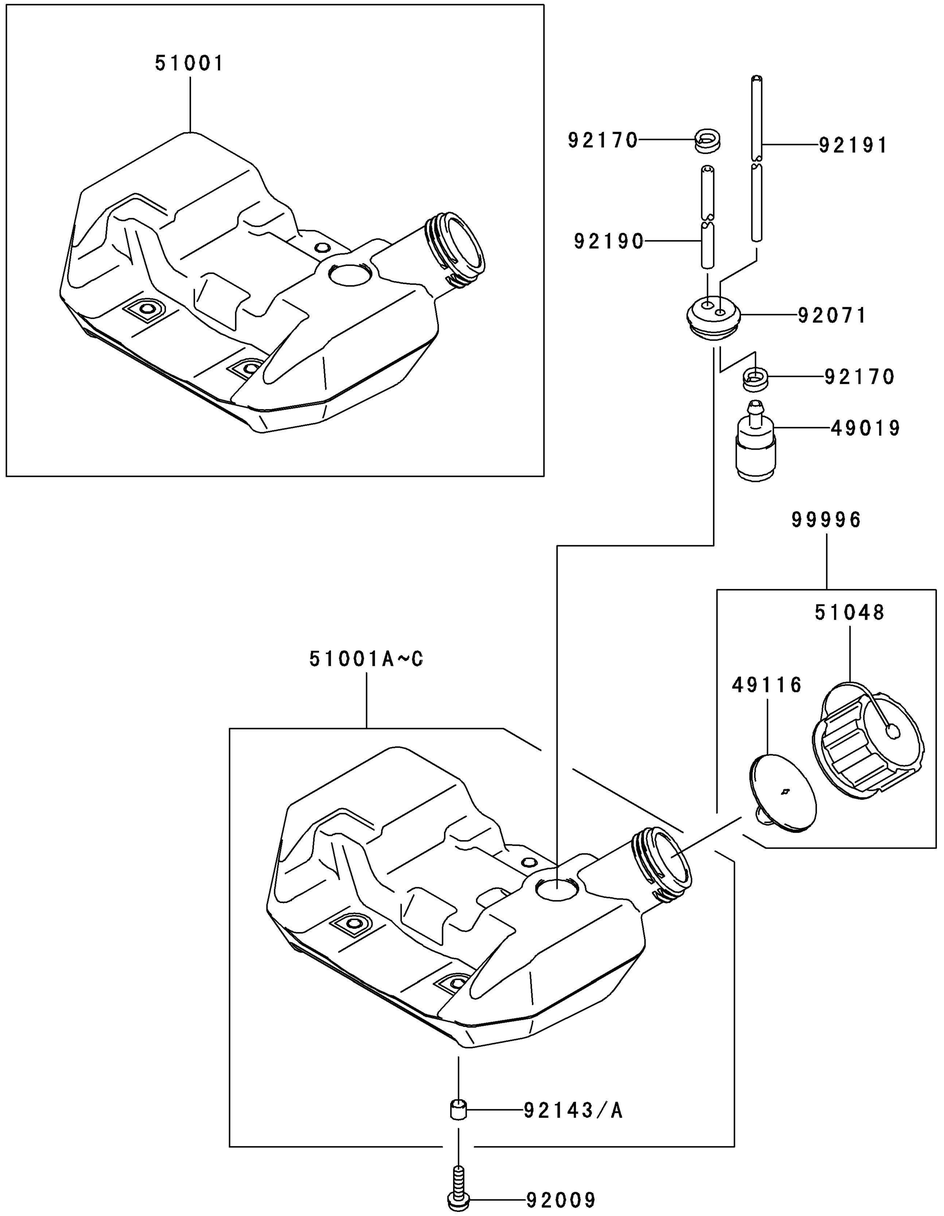

Ref. No.	Part No.	Description	Quantity A	Quantity B
49019	49019-2111	FILTER-FUEL	1	1
49116	49116-2064	VALVE-ASSY	1	1
51001	51001-2299	TANK-COMP-FUEL	*	
51001A	51001-2314	TANK-COMP-FUEL		*
51001B	51001-2314	TANK-COMP-FUEL	1	
51001C	51001-2321	TANK-COMP-FUEL		1
51048	51048-2078	CAP-ASSY-TANK	1	1
92009	92009-2383	SCREW,5X20	3	3
92071	92071-2142	GROMMET,FUEL TANK	1	1
92143	92143-2161	COLLAR,TANK		3
92143A	92143-2161	COLLAR,TANK	3	
92170	92170-2080	CLAMP,FUEL FILTER	2	2
92190	92190-2174	TUBE,3X6X90	1	1
92191	92191-2102	TUBE,3X5X182	1	1
99996	99996-6060	KIT,CAP-ASSY-TANK	1	1

E0210-A200D

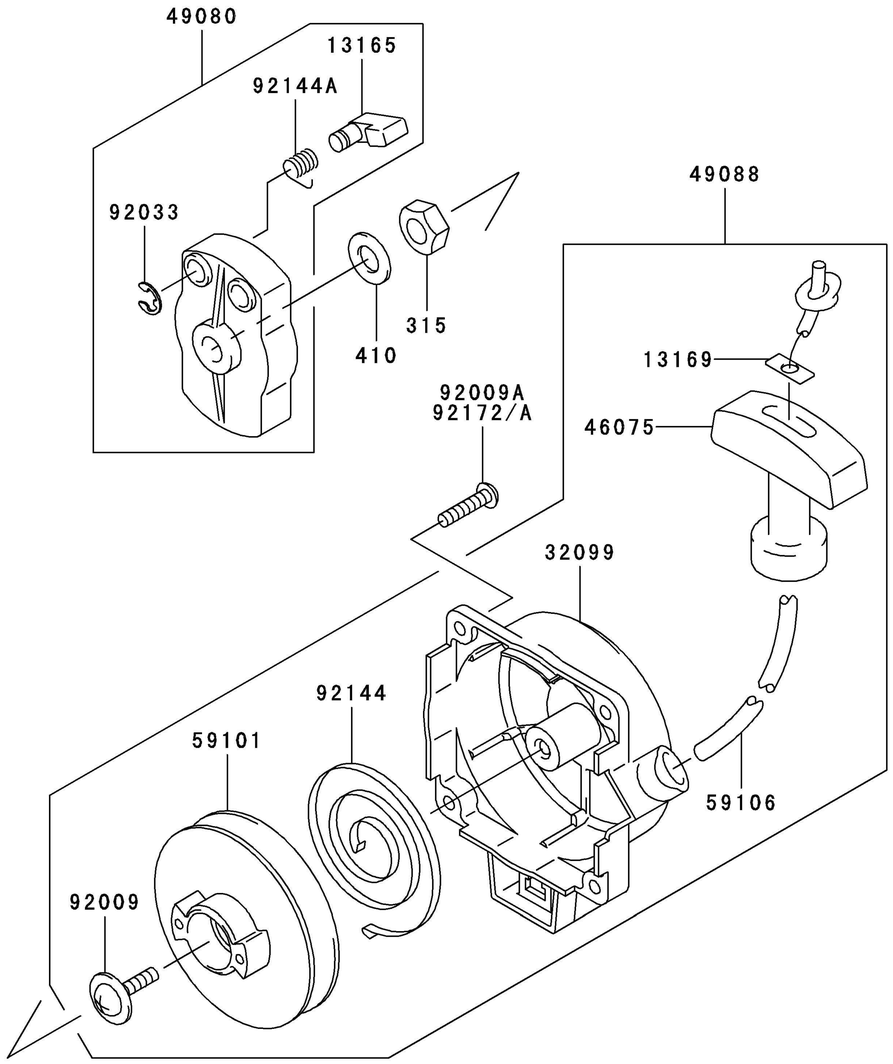

Ref. No.	Part No.	Description	Quantity A	Quantity B
13165	13165-2084	PAWL,RECOIL STARTER	1	1
13169	13169-2386	PLATE,RECOIL STARTER	1	1
32099	32099-2358	CASE,RECOIL STARTER	1	1
46075	46075-2128	GRIP,RECOIL STARTER	1	1
49080	49080-2134	PULLEY-STARTING	1	1
49088	49088-2500	STARTER-RECOIL	1	1
59101	59101-2085	REEL,RECOIL STARTER	1	1
59106	59106-2151	ROPE	1	1
92009	92009-2358	SCREW	1	1
92009A	92009-2412	SCREW	*	
92033	92033-2010	RING-SNAP	1	1
92144	92144-2054	SPRING	1	1
92144A	92144-2157	SPRING	1	1
92172	92172-2063	SCREW		4
92172A	92172-2063	SCREW	4	
315	315B0800	NUT-HEX-FINE	1	1
410	410B0800	W-PLAIN-S	1	1

E0220-A008A

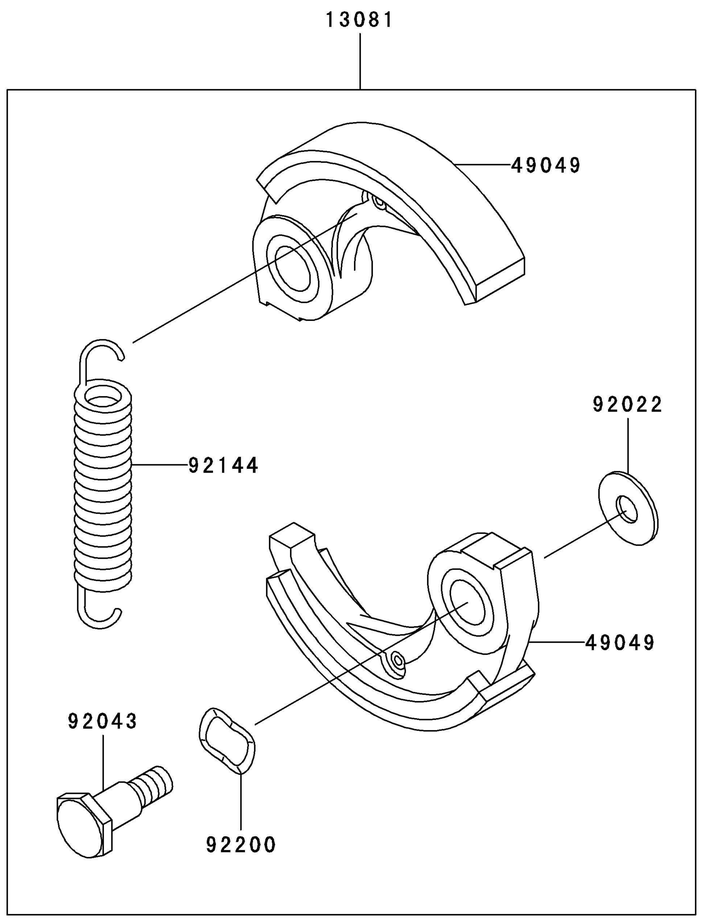

Ref. No.	Part No.	Description	Quantity A	Quantity B
13081	13081-2220	CLUTCH-ASSY	1	1
49049	49049-2075	SHOE-CLUTCH	2	2
92022	92026-2125	WASHER	2	2
92043	92043-2210	PIN,CLUTCH	2	2
92144	92144-2390	SPRING	1	1
92200	92200-2064	WASHER,SPRING,10.5X14.5X0.3	2	2

F0290-A691A

Ref. No.	Part No.	Description	Quantity A	Quantity B
56039	56039-2890	LABEL-PRODUCT	1	1
56070	56070-2020	LABEL-WARNING	1	1
56080	56080-2166	LABEL-BRAND	1	1

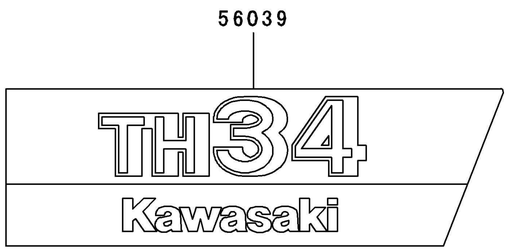

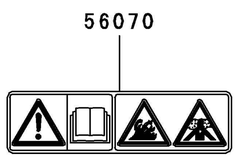

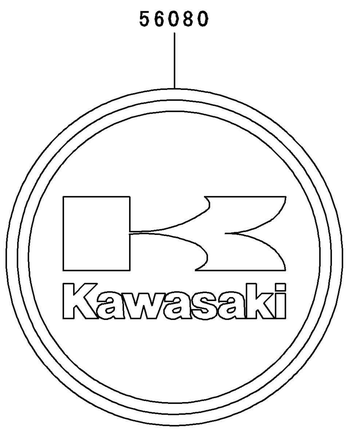

PART NAME INDEX

AIR-FILTER/MUFFLER B-08
CARBURETOR B-07
COOLING-EQUIPMENT B-05
CYLINDER/CRANKCASE B-03
ELECTRIC-EQUIPMENT B-06
FUEL-TANK/FUEL-VALVE B-09
LABEL C-03
P.T.O-EQUIPMENT B-11
PISTON/CRANKSHAFT B-04
STARTER B-10

This catalog covers:

TH034D- ☐ A50

GRID NO. **H-10** *This grid covers:*

NUMERICAL PARTS INDEX

Part No.	Grid No.
11005-2140	B-03
11009-2757	B-07
11010-2526	B-08
11013-2184	B-08
11038-2069	B-08
11049-2006	B-07
11060-2111	B-07
11060-2404	B-07
11060-2435	B-03
11060-2436	B-08
11060-2437	B-07
11065-2072	B-08
13001-2147	B-04
13002-2059	B-04
13008-6045	B-04
13033-2052	B-04
13081-2220	B-11
13165-2084	B-10
13169-2386	B-10
14002-2331	B-03
14002-2332	B-03
14002-2335	B-03
14002-2347	B-03
14002-2347	B-03
14043-2051	B-07
14090-2017	B-07
14091-2053	B-08
15003-2688	B-07
15003-2936	B-07
16030-2078	B-07
16055-2051	B-07
16073-2197	B-05
16073-2198	B-06
16073-2202	B-07
16160-2089	B-07
16160-2103	B-07
16185-2024	B-07
18020-2082	B-08
21050-2282	B-06
21050-2301	B-06
21050-2301	B-06
21083-2073	B-07
21130-2056	B-06
21169-2051	B-06
21171-2234	B-06
233B0516	B-05
26011-2113	B-06
26011-2361	B-06
26011-2376	B-06
26011-2376	B-06
315B0800	B-06
315B0800	B-10
32099-2358	B-10
34001-2086	B-03
410B0800	B-06
410B0800	B-10
43028-2054	B-07
43028-2067	B-07
43049-2060	B-07
46075-2128	B-10
461F0800	B-06
49019-2111	B-09
49043-2067	B-07
49049-2075	B-11
49070-2693	B-08
49080-2134	B-10
49088-2500	B-10
49089-2479	B-05
49089-2535	B-05
49089-2598	B-05
49089-2598	B-05
49116-2064	B-09
49119-2190	B-04
51001-2299	B-09
51001-2314	B-09
51001-2314	B-09
51001-2321	B-09
51048-2078	B-09
510A3100	B-06
55020-2125	B-05
551A0410	B-05
56039-2890	C-03
56070-2020	C-03
56080-2166	C-03
59066-2724-9B	B-05
59066-2724-9B	B-05
59066-2793-9B	B-05
59101-2085	B-10
59106-2151	B-10
92002-2163	B-03
92002-2197	B-06
92009-1002	B-08
92009-2115	B-03
92009-2249	B-07
92009-2277	B-07
92009-2336	B-07
92009-2337	B-07
92009-2354	B-07
92009-2358	B-10
92009-2383	B-09
92009-2393	B-08
92009-2394	B-05
92009-2410	B-08
92009-2412	B-10
92009-2420	B-07
92015-2145	B-07
92025-2104	B-04
92025-2105	B-04
92025-2106	B-04
92026-2125	B-11
92033-2010	B-10
92033-2061	B-04
92033-2078	B-07
92043-1302	B-03
92043-2094	B-07
92043-2210	B-11
92045-2058	B-03
92049-2108	B-03
92055-2147	B-07
92063-2356	B-07
92070-2108	B-06
92071-2142	B-09
92071-2157	B-05
92143-2161	B-09
92143-2161	B-09
92144-2054	B-10
92144-2157	B-10
92144-2308	B-07
92144-2390	B-11
92151-2108	B-08
92170-2041	B-06
92170-2080	B-09
92172-0007	B-08
92172-0007	B-08
92172-2063	B-10
92172-2063	B-10
92190-2174	B-09
92191-2102	B-09
92200-2063	B-05
92200-2064	B-11
92200-2074	B-07
92200-2156	B-05
92200-2156	B-05
99996-6060	B-09