Esploso per modello:

AGP-270

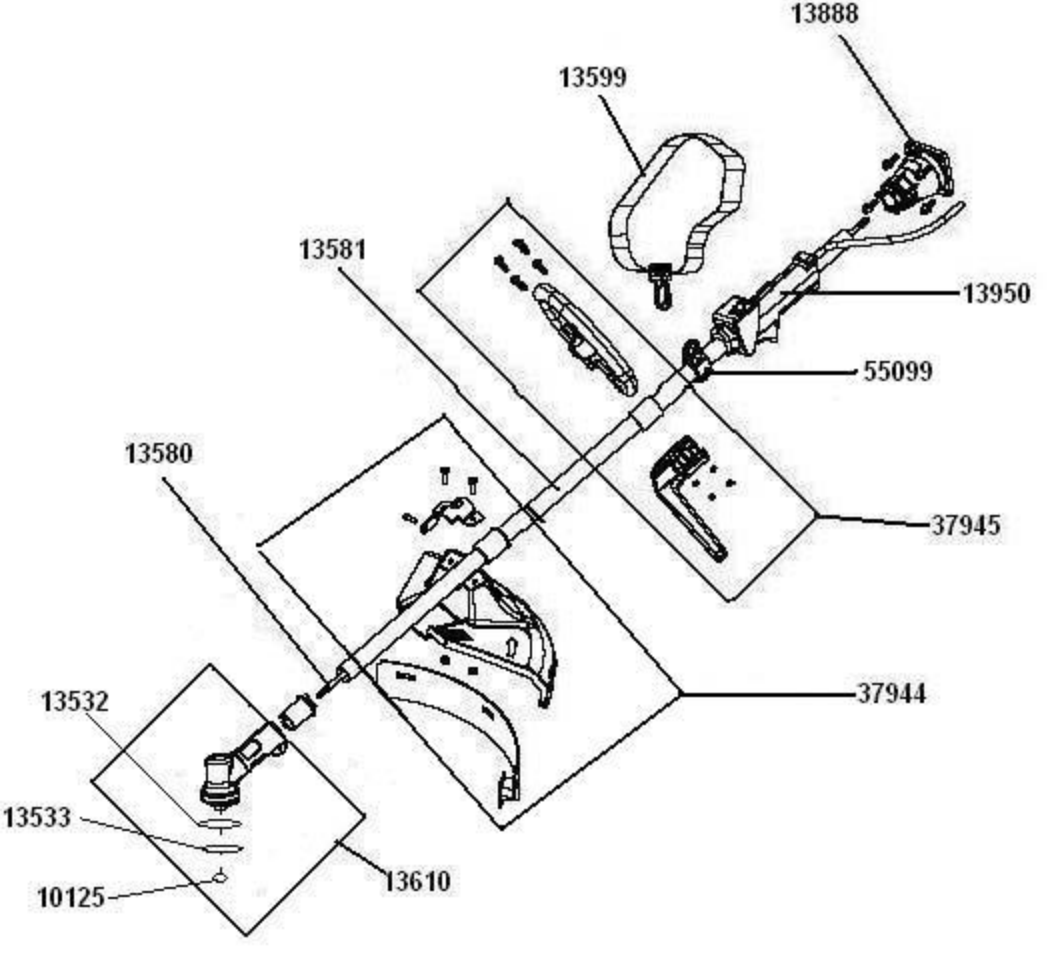

PARTS CATALOG

2-STROKE ENGINE

TJ027D

PRODUCT CODE	NOTE
TJ027D-AS50	STD

Kawasaki
KAWASAKI HEAVY INDUSTRIES, LTD

P/N 99907-2734-01

PARTS CATALOG INTRODUCTION

This parts catalog lists parts and sub-assemblies provided as service parts.
When it becomes necessary to replace parts, always use KAWASAKI GENUINE PARTS which have passed strict inspection which guarantees quality and performance.

1. HOW TO ORDER PARTS

1) When ordering the parts, be sure to use the parts catalog corresponding to the product code. Check the product revision codes on the product and the catalog.
   Product Code (example) : FA130D–AA00
   Product Revision Code
2) Specify the part code (all digits) exactly as listed in this catalog on your parts order.
3) The parts not shown in the illustrations of this catalog are not sold separately; only the complete units or next higher assemblies illustrated are supplied as the service parts.

2. EXPLANATION OF PARTS CATALOG FORMAT

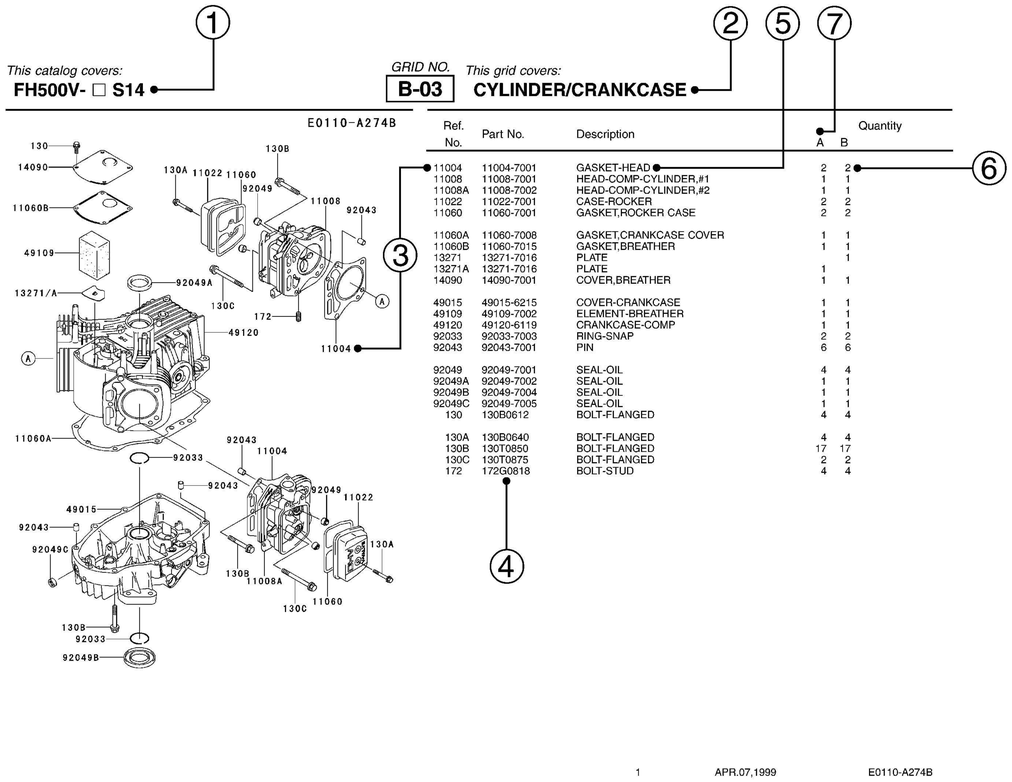

1) Product Code

This code describes the product code covered by this catalog. The product revision code, which is a part of the product code, is omitted.

2) Part Group Title

This title is the representative name for the group of parts illustrated on the page.

3) Reference Number

The reference numbers are shown on the illustration and the list as the link between them.

4) Part Number

This is the key of your parts ordering.
Three kinds of part number are used in this catalog.

a. Structure 1
   □□□□□□—□□□□—□□
   □□□□□□—□□□□□□
   Part Revision Code

b. Structure 2
   □□□□□—□□□□—□□
   Color Code for Painted Part

c. Standard Hardware Number
   (for bolts, nuts, washer, or the like)
   □□□□□□□□
   Size Code
   Material and Surface Treatment Code
   Item Code

5) Description and Additional Information

The part name, the location, the size, and the serial number as additional information, etc. are described here. Use them to find out and check the part required.
When a part number is changed without change of the product revision code and the changed parts are not interchangeable, the serial number of the product is noted as follows;

(	– FA130 – 100001)	: Affected units are from beginning of the product of the product code up to and including this serial number.
(FA130 – 100002	–)	: Affected units are from this serial number and above.
(FA130 – 100002	– FA130 – 110001)	: Affected units are in this serial number range.

6) Quantity

The figure shows quantity of the part required at the indicated position on the illustration and for the specified product revision code.
The asterisk (*) on this column means the part can be used as the substitute on the product and is supplied until the stock is exhausted.
Note:Some small parts will be supplied by units.
Example: If six (6) bolts are ordered and the minimum quantity per unit is five (5), two (2), units of the bolt will be delivered.

7) Product Revision Code

This Code indicates an important change which affects the service parts interchangeability.

3. ABBREVIATIONS

#.....Number	FR.....Front	RH.....Right Hand
&.....And	G.....Gram	RPM.....Revolutions Per Minute
(+).....Plus	HEX.....Hexagonal	RR.....Rear
(–).....Minus	ID=.....Inside Diameter	STD.....Standard
2ND.....Second	IN.....Inch	T.....Teeth
3RD.....Third	L=.....Length	T=.....Thickness
4TH.....Fourth	LH.....Left Hand	U/S.....Under Size
A.....Ampere	LWR.....Lower	UPP.....Upper
AR.....As Required	MM.....Millimeter	V.....Volt
ASSY.....Assembly	O/S.....Over Size	W.....Watt
CNT.....Center	OD=.....Outside Diameter	
COMP.....Complete	REF.....Reference	

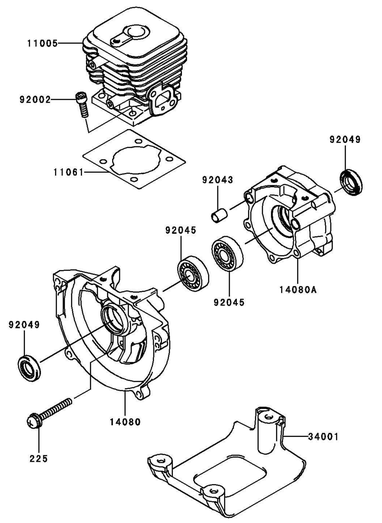

B-03 CYLINDER/CRANKCASE

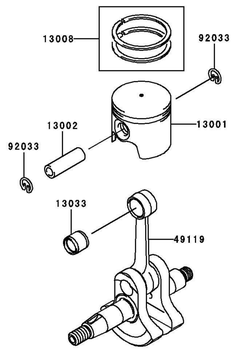

B-04 PISTON/CRANKSHAFT

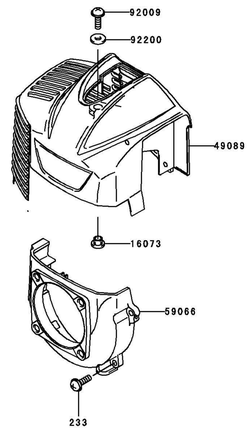

B-05 COOLING-EQUIPMENT

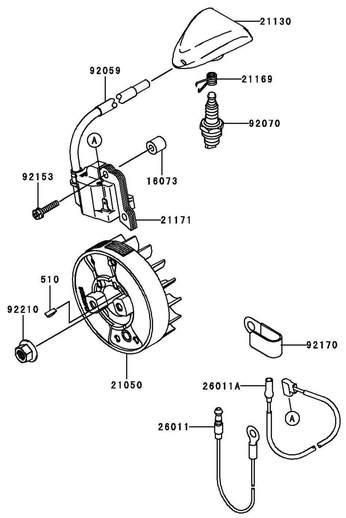

B-06 ELECTRIC-EQUIPMENT

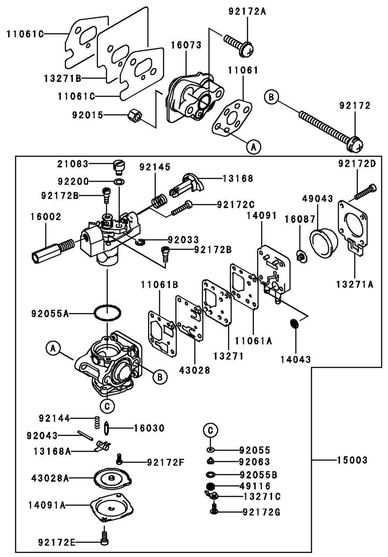

B-07 CARBURETOR

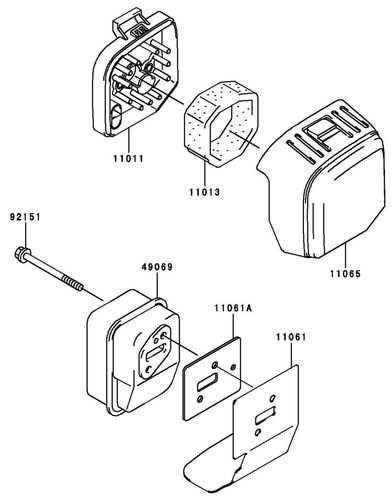

B-08 AIR-FILTER/MUFFLER

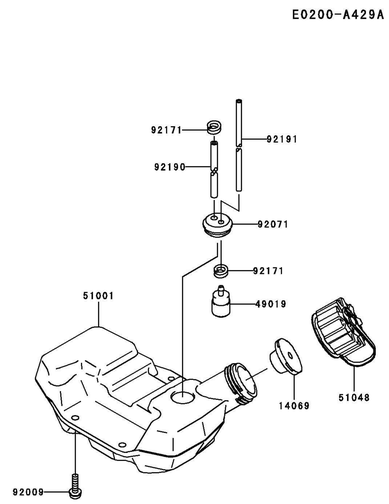

B-09 FUEL-TANK/FUEL-VALVE

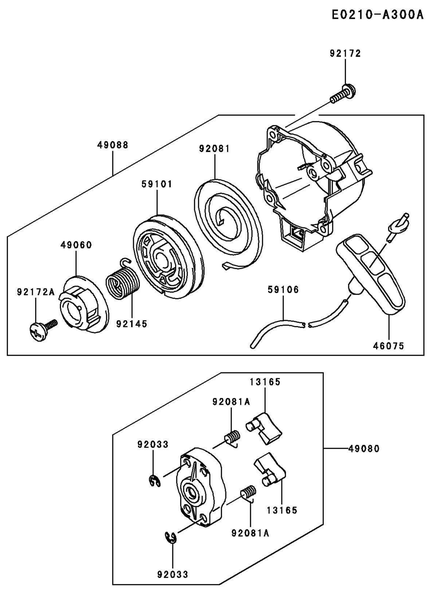

B-10 STARTER

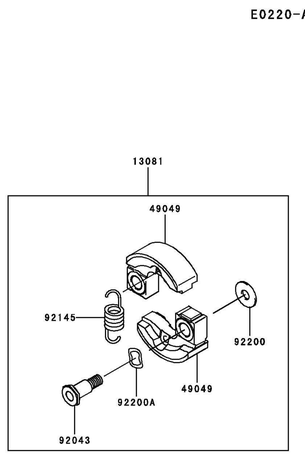

B-11 P.T.O-EQUIPMENT

F0290-B101A

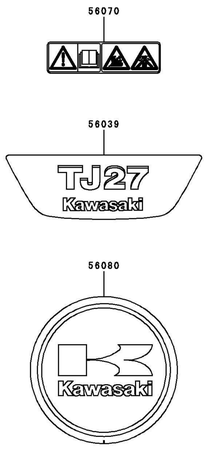

C-03 LABEL

E0110-A429A

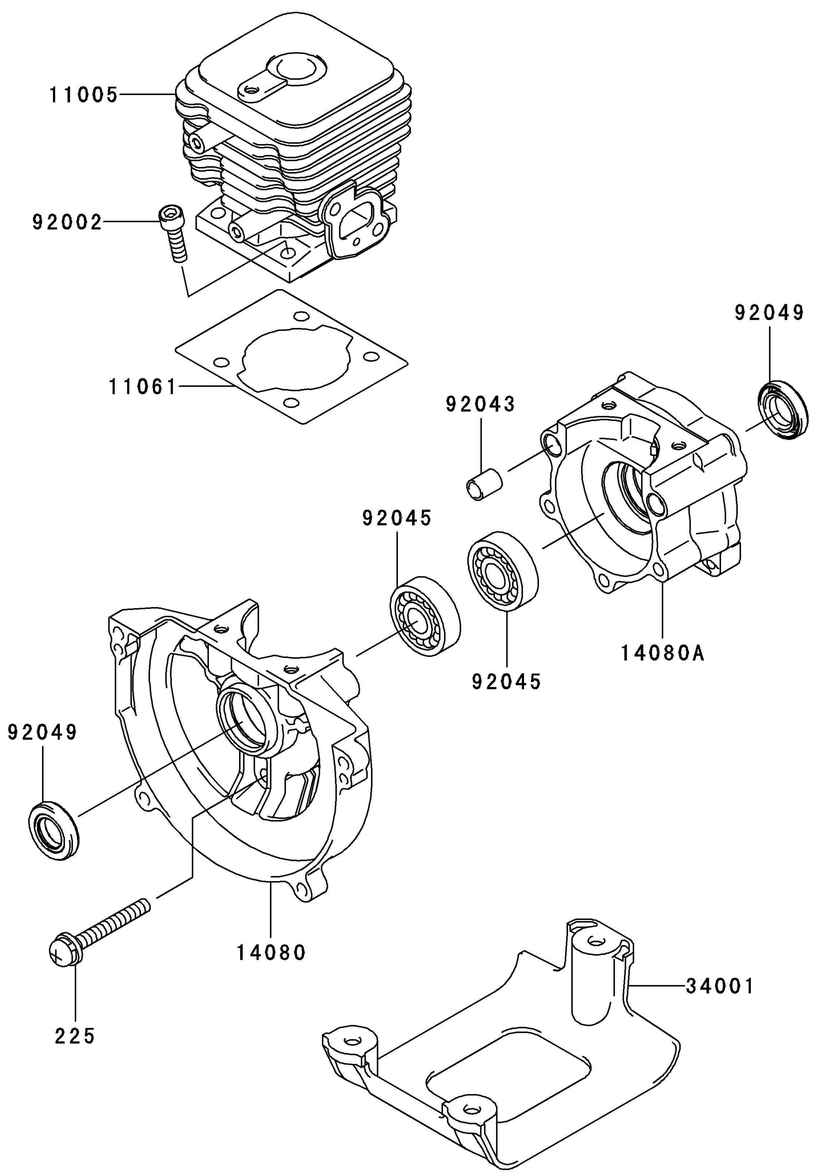

Ref. No.	Part No.	Description	Quantity A
11005	11005-2155	CYLINDER-ENGINE	1
11061	11061-2113	GASKET,CYLINDER	1
14080	14080-2051	CRANKCASE	1
14080A	14080-2052	CRANKCASE	1
34001	34001-2087	STAND	1
92002	92002-2163	BOLT	4
92043	92043-1302	PIN	2
92045	92045-2060	BEARING-BALL,6001V3	2
92049	92049-2253	SEAL-OIL,ISCD12X22X4.5	2
225	225B0535	SCREW-PAN-WSP-CROS	3

E0120-A286A

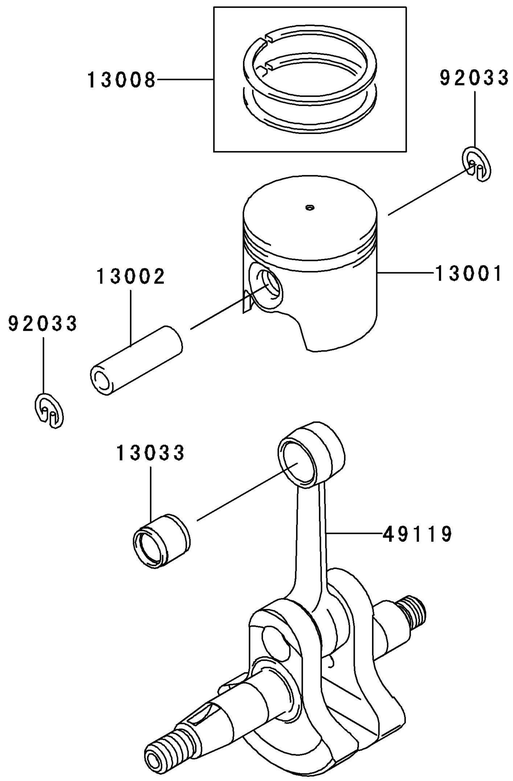

Ref. No.	Part No.	Description	Quantity A
13001	13001-2156	PISTON-ENGINE	1
13002	13002-2058	PIN-PISTON	1
13008	13008-6046	RING-SET-PISTON	1
13033	13033-2057	BEARING-SMALL END	1
49119	49119-2225	CRANKSHAFT-ASSY	1
92033	92033-2191	RING-SNAP	2

E0150-A539A

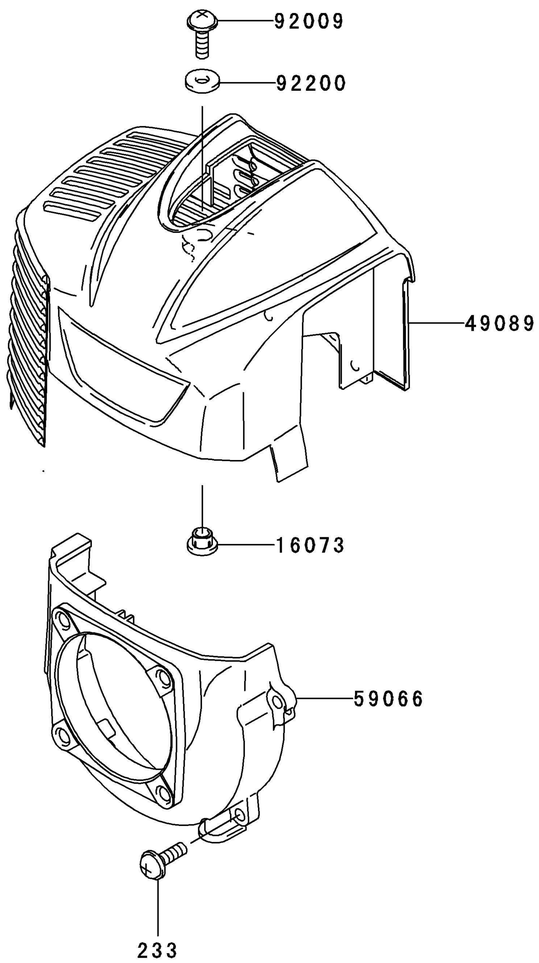

Ref. No.	Part No.	Description	Quantity A
16073	16073-2219	INSULATOR	1
49089	49089-2568	SHROUD-ENGINE	1
59066	59066-2768	HOUSING-FAN	1
92009	92009-2394	SCREW,5X16	1
92200	92200-2156	WASHER	1
233	233B0516	SCREW-PAN-WP+-	4

E0160-B030D

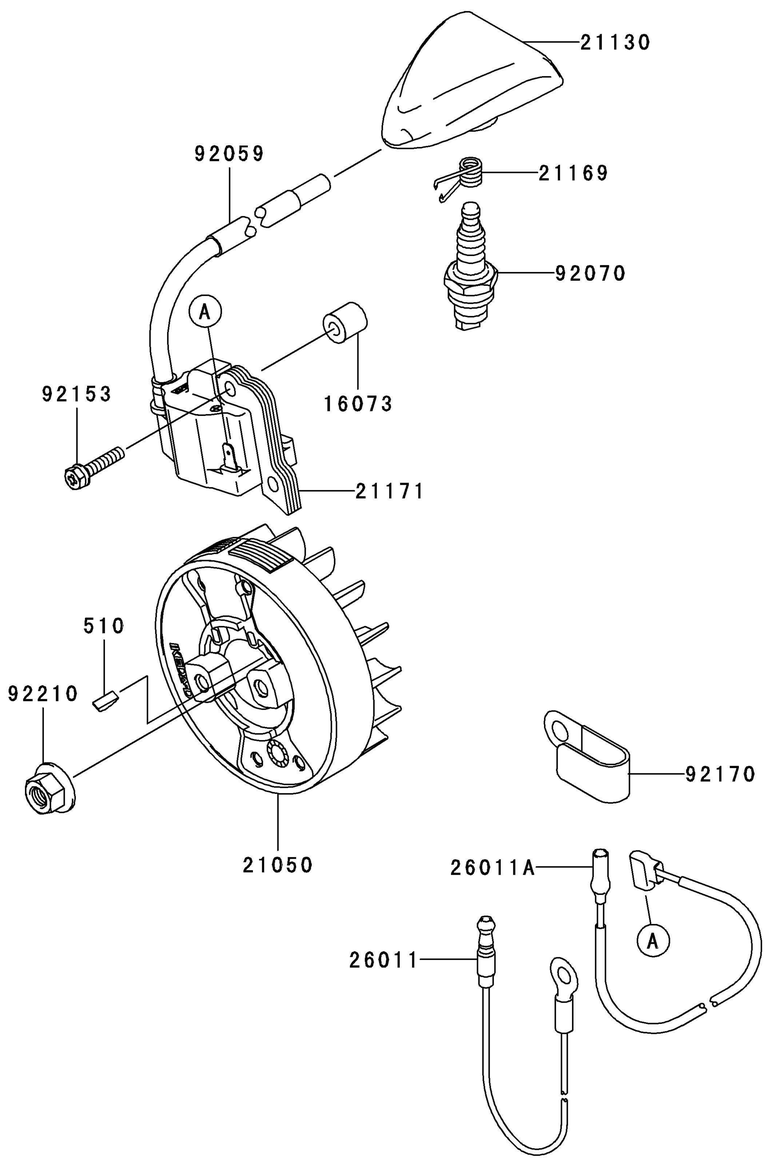

Ref. No.	Part No.	Description	Quantity A
16073	16073-2220	INSULATOR	2
21050	21050-2311	FLYWHEEL	1
21130	21130-2070	CAP-SPARK PLUG	1
21169	21169-2051	TERMINAL	1
21171	21171-2243	COIL-ASSY-IGNITION	1
26011	26011-2113	WIRE-LEAD	1
26011A	26011-2361	WIRE-LEAD,L=230	1
92059	92059-2111	TUBE	1
92070	92070-2108	PLUG-SPARK,BPMR6A(NGK),SOLID	1
92153	92153-2079	BOLT,4X20	2
92170	92170-2041	CLAMP	1
92210	92210-2101	NUT,M8	1
510	510A3100	KEY-WOODRUFF	1

E0180-A609N

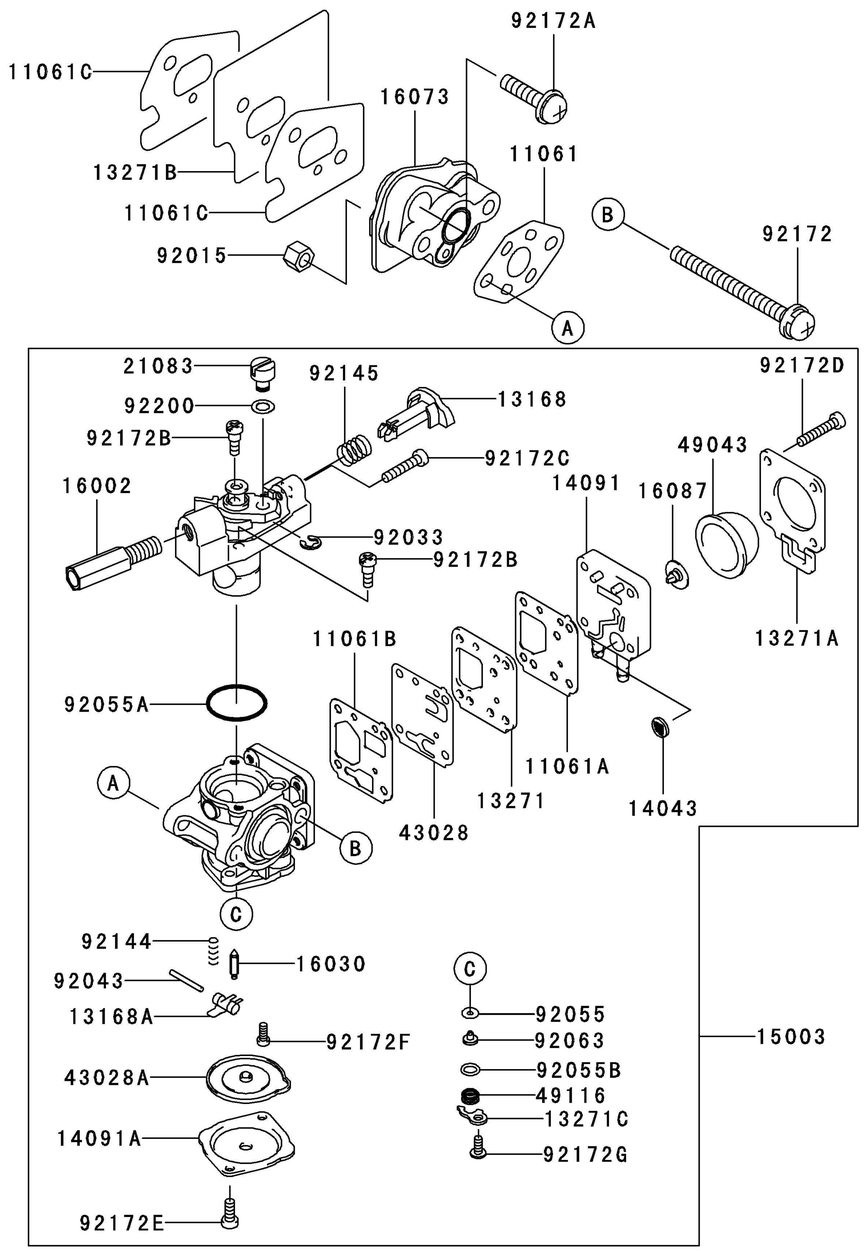

Ref. No.	Part No.	Description	Quantity A
11061	11061-2115	GASKET,CARBURETOR	1
11061A	11061-2121	GASKET	1
11061B	11061-2122	GASKET	1
11061C	11061-2123	GASKET,INSULATOR	2
13168	13168-2488	LEVER	1
13168A	13168-2489	LEVER	1
13271	13271-2226	PLATE	1
13271A	13271-2227	PLATE	1
13271B	13271-2228	PLATE	1
13271C	13271-2247	PLATE	1
14043	14043-2075	FILTER	1
14091	14091-2110	COVER	1
14091A	14091-2111	COVER	1
15003	15003-2941	CARBURETOR-ASSY	1
16002	16002-2059	ADJUSTER-CABLE	1
16030	16030-2091	VALVE-FLOAT	1
16073	16073-2218	INSULATOR	1
16087	16087-2059	VALVE-CHECK	1
21083	21083-2085	ARM	1
43028	43028-2092	DIAPHRAGM	1
43028A	43028-2093	DIAPHRAGM	1
49043	49043-2071	PUMP-PRIMING	1
49116	49116-2066	VALVE-ASSY	1
92015	92015-2097	NUT,M5	2
92033	92033-2192	RING-SNAP	1
92043	92043-2099	PIN	1
92055	92055-2077	RING-O	1
92055A	92055-2203	RING-O	1
92055B	92055-2207	RING-O	1
92063	92063-2452	JET-MAIN,#42	1
92144	92144-2009	SPRING	1
92145	92145-2130	SPRING	1
92172	92172-2067	SCREW,5X60	2
92172A	92172-2068	SCREW,5X20	2
92172B	92172-2070	SCREW	2
92172C	92172-2071	SCREW	1
92172D	92172-2072	SCREW	4
92172E	92172-2073	SCREW	2
92172F	92172-2074	SCREW	1
92172G	92172-2086	SCREW	1
92200	92200-2150	WASHER	1

E0190-A802A

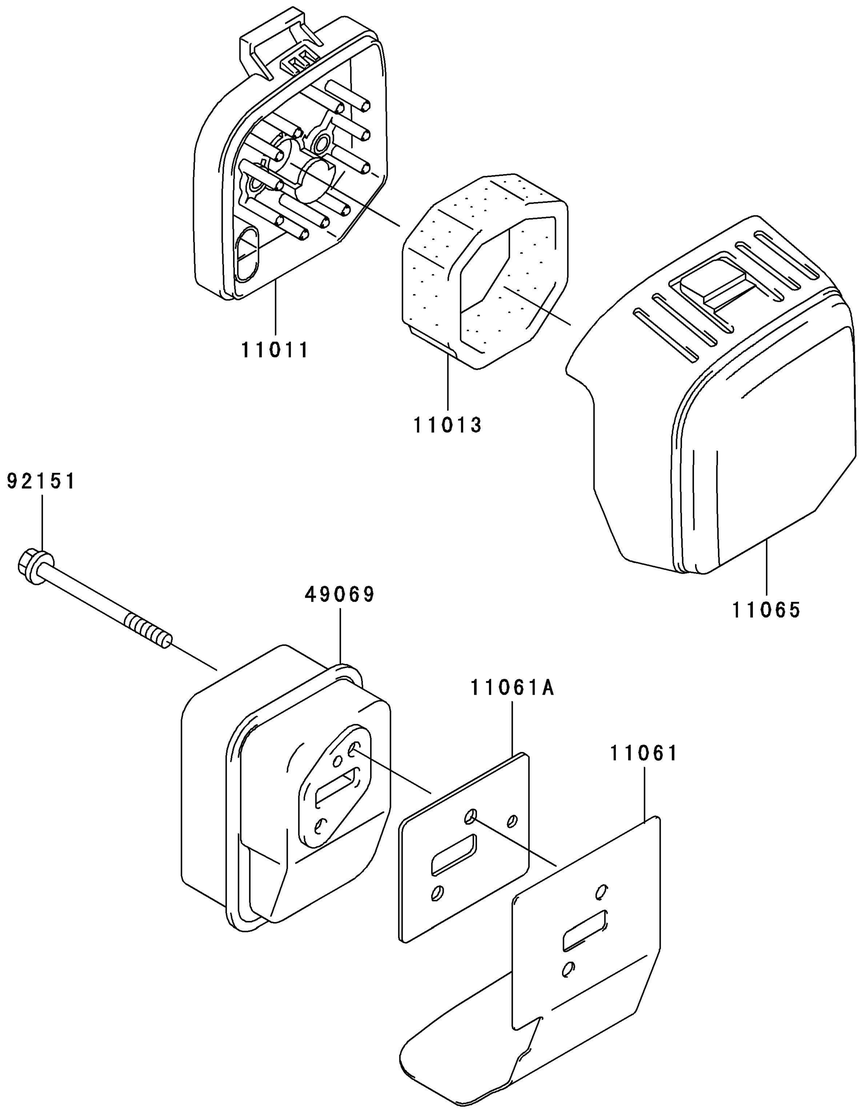

Ref. No.	Part No.	Description	Quantity A
11011	11011-2338	CASE-AIR FILTER	1
11013	11013-2203	ELEMENT-AIR FILTER	1
11061	11061-2112	GASKET,MUFFLER	1
11061A	11061-2153	GASKET	1
11065	11065-2106	CAP	1
49069	49069-2414	MUFFLER-ASSY	1
92151	92151-2108	BOLT,5X60	2

E0200-A429A

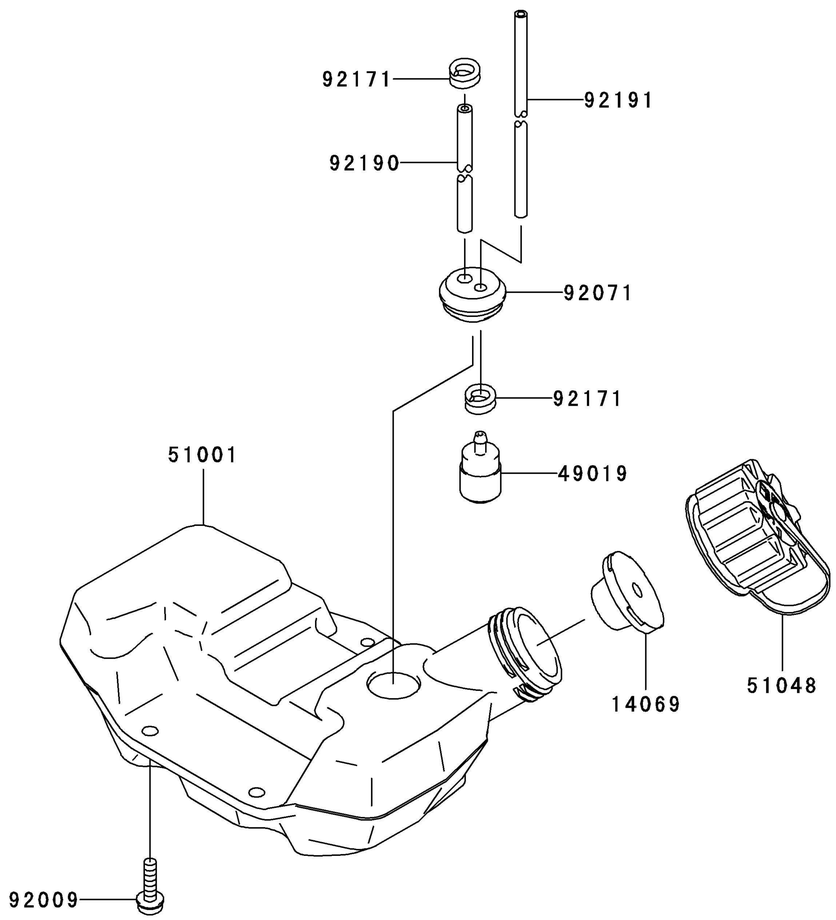

Ref. No.	Part No.	Description	Quantity A
14069	14069-2088	BREATHER	1
49019	49019-2114	FILTER-FUEL	1
51001	51001-2319	TANK-COMP-FUEL	1
51048	51048-2083	CAP-ASSY-TANK	1
92009	92009-2383	SCREW,5X20	3
92071	92071-2142	GROMMET,FUEL TANK	1
92171	92171-2073	CLAMP	2
92190	92190-2174	TUBE,3X6X90	1
92191	92191-2102	TUBE,3X5X182	1

E0210-A300A

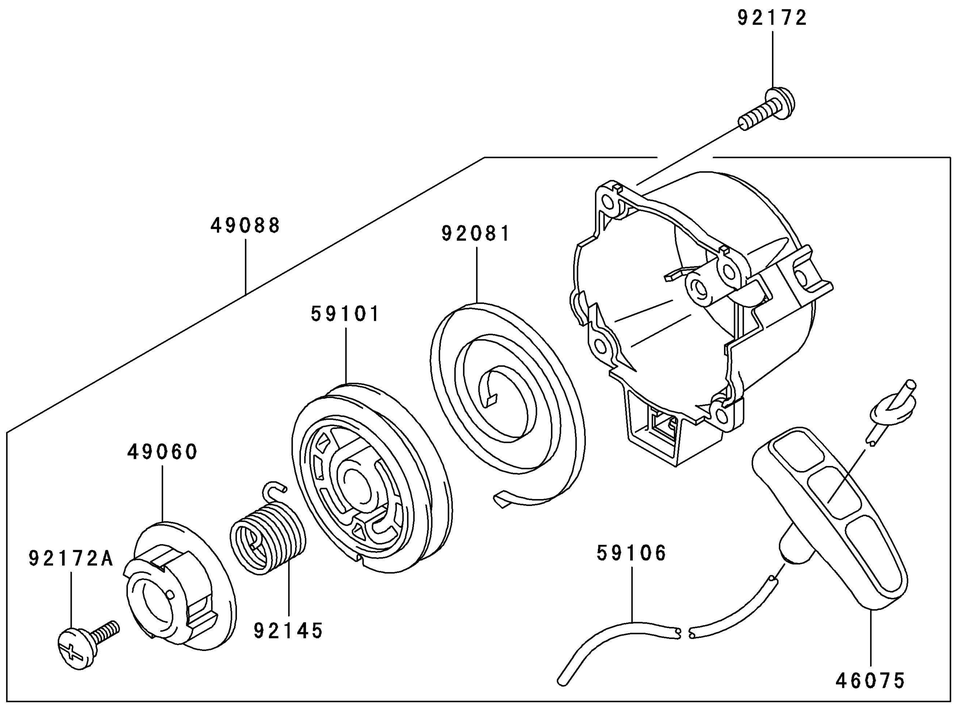

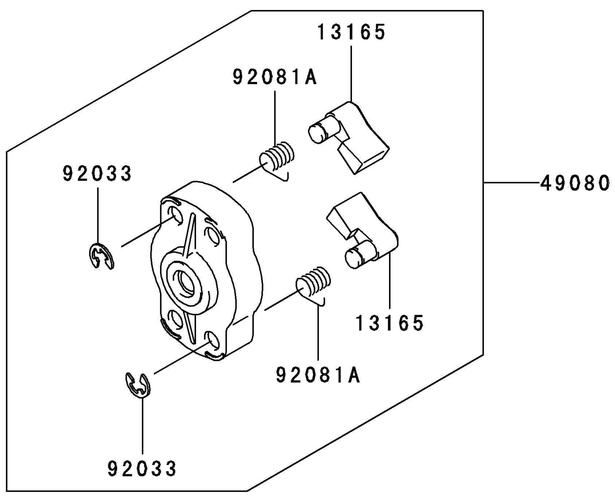

Ref. No.	Part No.	Description	Quantity A
13165	13165-2100	PAWL	2
46075	46075-2148	GRIP,STARTER-RECOIL	1
49060	49060-2061	CAM,STARTER-RECOIL	1
49080	49080-2195	PULLEY-STARTING	1
49088	49088-2530	STARTER-RECOIL	1
59101	59101-2115	REEL,STARTER-RECOIL	1
59106	59106-2168	ROPE,3X700	1
92033	92033-2010	RING-SNAP	2
92081	92081-2238	SPRING,RECOIL	1
92081A	92081-2253	SPRING	2
92145	92145-2128	SPRING,RECOIL	1
92172	92172-2061	SCREW,4X14	4
92172A	92172-2065	SCREW	1

E0220-A039A

Ref. No.	Part No.	Description	Quantity A
13081	13081-2232	CLUTCH-ASSY	1
49049	49049-2101	SHOE-CLUTCH	2
92043	92043-2243	PIN	2
92145	92145-2129	SPRING	1
92200	92200-2145	WASHER,6X16X1	2
92200A	92200-2146	WASHER	2

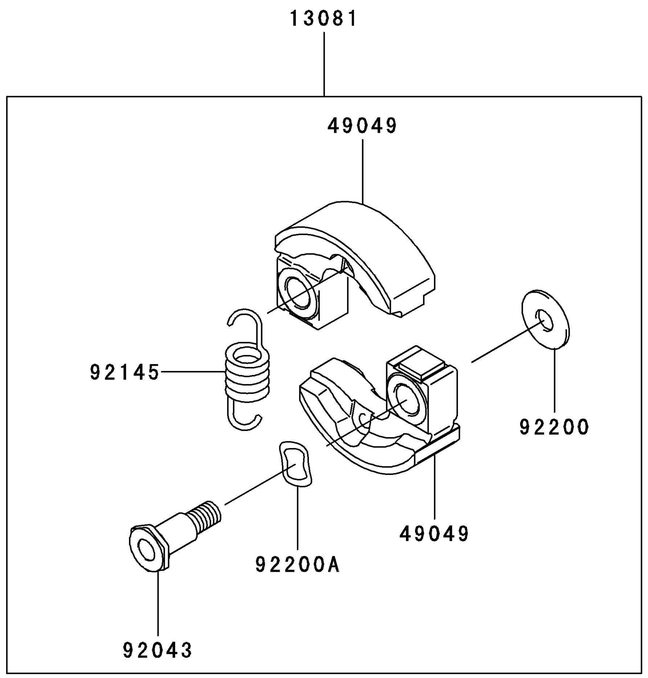

F0290-B101A

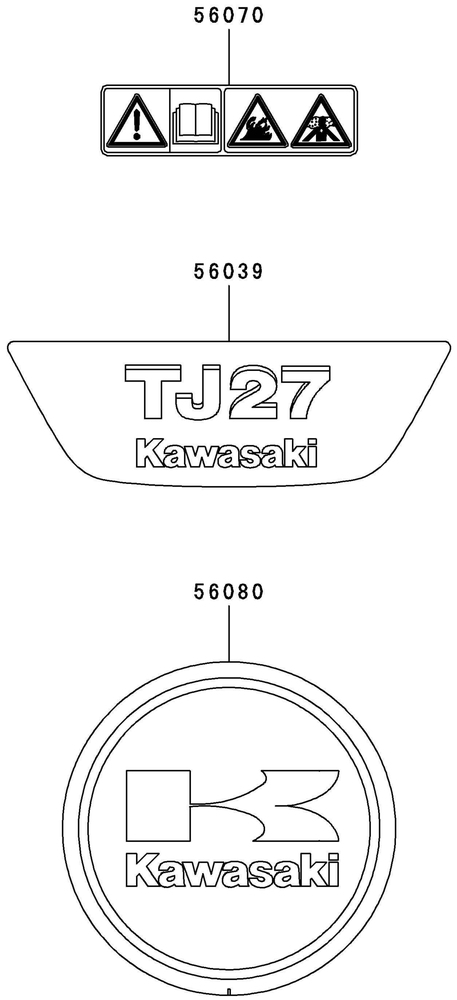

Ref. No.	Part No.	Description	Quantity A
56039	56039-2918	LABEL-PRODUCT	1
56070	56070-2020	LABEL-WARNING	1
56080	56080-2324	LABEL-BRAND	1

PART NAME INDEX

AIR-FILTER/MUFFLER B-08
CARBURETOR B-07
COOLING-EQUIPMENT B-05
CYLINDER/CRANKCASE B-03
ELECTRIC-EQUIPMENT B-06
FUEL-TANK/FUEL-VALVE B-09
LABEL C-03
P.T.O-EQUIPMENT B-11
PISTON/CRANKSHAFT B-04
STARTER B-10

This catalog covers:

TJ027D- ☐ S50

GRID NO. **H-10** *This grid covers:*

NUMERICAL PARTS INDEX

Part No.	Grid No.
11005-2155	B-03
11011-2338	B-08
11013-2203	B-08
11061-2112	B-08
11061-2113	B-03
11061-2115	B-07
11061-2121	B-07
11061-2122	B-07
11061-2123	B-07
11061-2153	B-08
11065-2106	B-08
13001-2156	B-04
13002-2058	B-04
13008-6046	B-04
13033-2057	B-04
13081-2232	B-11
13165-2100	B-10
13168-2488	B-07
13168-2489	B-07
13271-2226	B-07
13271-2227	B-07
13271-2228	B-07
13271-2247	B-07
14043-2075	B-07
14069-2088	B-09
14080-2051	B-03
14080-2052	B-03
14091-2110	B-07
14091-2111	B-07
15003-2941	B-07
16002-2059	B-07
16030-2091	B-07
16073-2218	B-07
16073-2219	B-05
16073-2220	B-06
16087-2059	B-07
21050-2311	B-06
21083-2085	B-07
21130-2070	B-06
21169-2051	B-06
21171-2243	B-06
225B0535	B-03
233B0516	B-05
26011-2113	B-06
26011-2361	B-06
34001-2087	B-03
43028-2092	B-07
43028-2093	B-07
46075-2148	B-10
49019-2114	B-09
49043-2071	B-07
49049-2101	B-11
49060-2061	B-10
49069-2414	B-08
49080-2195	B-10
49088-2530	B-10
49089-2568	B-05
49116-2066	B-07
49119-2225	B-04
51001-2319	B-09
51048-2083	B-09
510A3100	B-06
56039-2918	C-03
56070-2020	C-03
56080-2324	C-03
59066-2768	B-05
59101-2115	B-10
59106-2168	B-10
92002-2163	B-03
92009-2383	B-09
92009-2394	B-05
92015-2097	B-07
92033-2010	B-10
92033-2191	B-04
92033-2192	B-07
92043-1302	B-03
92043-2099	B-07
92043-2243	B-11
92045-2060	B-03
92049-2253	B-03
92055-2077	B-07
92055-2203	B-07
92055-2207	B-07
92059-2111	B-06
92063-2452	B-07
92070-2108	B-06
92071-2142	B-09
92081-2238	B-10
92081-2253	B-10
92144-2009	B-07
92145-2128	B-10
92145-2129	B-11
92145-2130	B-07
92151-2108	B-08
92153-2079	B-06
92170-2041	B-06
92171-2073	B-09
92172-2061	B-10
92172-2065	B-10
92172-2067	B-07
92172-2068	B-07
92172-2070	B-07
92172-2071	B-07
92172-2072	B-07
92172-2073	B-07
92172-2074	B-07
92172-2086	B-07
92190-2174	B-09
92191-2102	B-09
92200-2145	B-11
92200-2146	B-11
92200-2150	B-07
92200-2156	B-05
92210-2101	B-06